FASEK –PIPELINE TECHNOLOGY

S U M M A R Y

1. COMPANY PROFILE
2. VALVE STATIONS
3. METERING / REGULATING, FILTER AND SCRAPER STATIONS
4. COGENERATION
5. FITTINGS
6. ACTUATOR TECHNOLOGY
7. LINE BREAK
8. VALVE TECHNOLOGY AND WELLHEADS
9. REFINERY TECHNOLOGY
10. REFERENCES
11. INQUIRIES
12. --

start page

FASEK –PIPELINE TECHNOLOGY

COMPANY INTRODUCTION

HISTORY

THE COMPANY WAS FOUNDED IN THE YEAR 1992 IN GERMANY CITY OF ROTENBURG AND REGISTERED UNDER NO. HRB 837 X .

THE IDEA WAS TO COMBINE WELL KNOWN AND HIGH QUALITY CAMERON BALL VALVE AND INNOVATIVE "STATE OF THE ART" ACTUATORS.
ASSEMBLY AND RESELL AS COMPLETE UNIT THROUGH FASEK ORGANISATION.

THE FIRST STEPS WERE TAKEN IN FORMER YUGOSLAVIA AND EASTERN EUROPE.

THE AUSTRIAN BRANCH COMPANY WAS ESTABLISHED IN 1994 AND REGISTERED UNDER FN52 956

IN FOLLOWING YEARS SISTER COMPANIES AND REPRESENTATIVE OFFICES WERE FOUNDED.

TODAY FASEK COMPANY CONSISTS OF 8 DISLOCATED BUSINESS UNITS WITH TOTALY 52 EMPLOYEES.

start page

FASEK

ISO 9001
REGISTERED FIRM

homepage : www.fasek.com email : austria@fasek.com

FASEK –PIPELINE TECHNOLOGY

FASEK
in Europe...

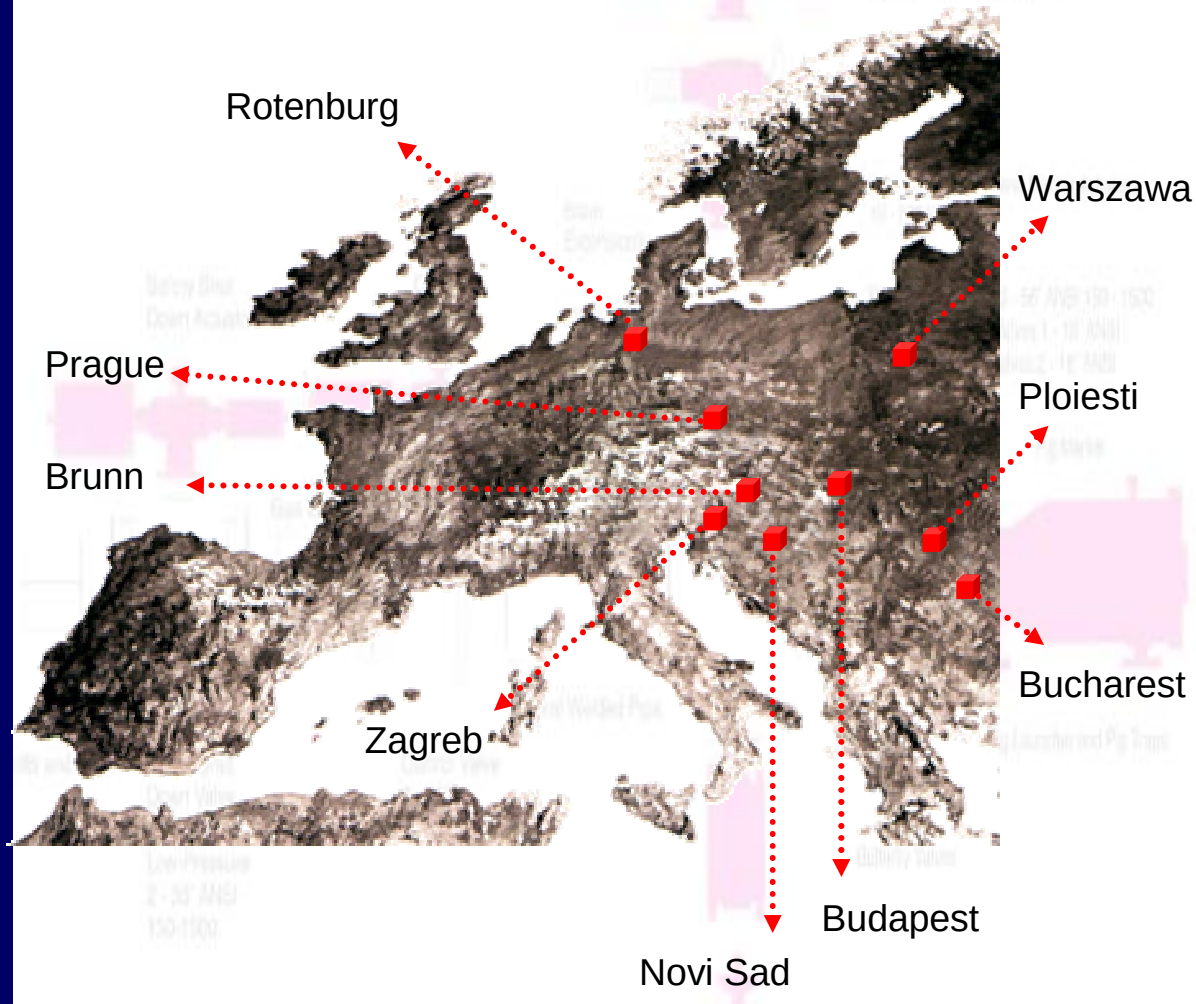

- **Germany:** Rotenburg
- **Austria :** Brunn
- **Poland :** Warszawa
- **Czech :** Prague
- **Croatia :** Zagreb
- **Yugoslavia :** Novi Sad
- **Hungary:** Budapest
- **Romania:** Bucharest,

start page

FASEK

homepage : www.fasek.com

email : austria@fasek.com

FASEK –PIPELINE TECHNOLOGY

Organisation..

Im Teich 3
D-27356 Rotenburg
Germany
phone: +49 4261 8408 0
fax: +49 4261 8408 40

Leopold-Gattringer-Str. 119
A-2345 Brunn am Gebirge
Austria
phone: +43 2236 35291
fax : +43 2236 35292

ARMATECH SP. Z.O.O.
ul. Perkuna 85
PL-04-124 Warszawa
phone: +48 22 5452 800
fax: +48 22 5452 888

FASEK KFT
Ponty U. 7
H-1011 Budapest
phone: +361 21 43110
fax: +361 21 43110

FASEK D.O.O.
Zvonigradska str. 43
HR-10000 Zagreb
phone: +385 1 3695 525
fax: +385 1 3695 546

FASEK D.O.O.
Pavla Simica 5
SRB - 21 000 Novi Sad
phone: +381 21 453 149
fax: +381 21 453 148

FASEK Baltic States
through Armatech
see above

FASEK GmbH
Bavorska 856
CZ-15541 Prague
phone : +420 22 4458046
fax : +420 22 4458168

FASEK Bucharest
Representation office
RO-71221 Bucuresti
phone: +40 723349599

FASEK Russia
will follow soon

start page

FASEK

homepage : www.fasek.com

email : austria@fasek.com

FASEK –PIPELINE TECHNOLOGY

Delivery Programm

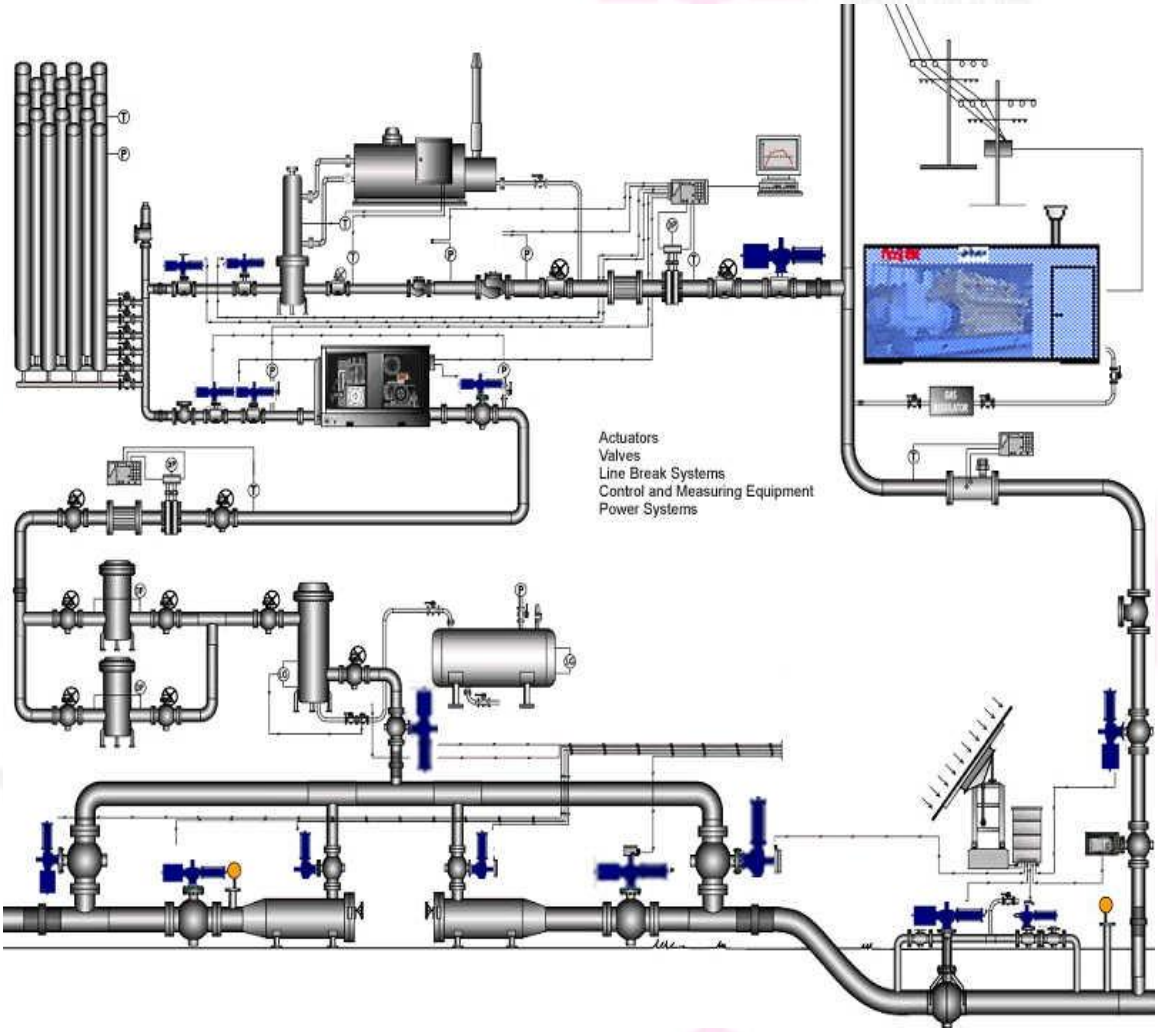

- Valve Station
- Scraper Trap Station
- Filter Seperator Station
- Gas Heater
- Heat Exchanger
- Gas Expansion Units
- Gas Storage Station
- Measuring Station
- Power Supply Systems
- Co-generation
- Solar Systems

start page

FASEK

homepage : www.fasek.com

email : austria@fasek.com

FASEK –PIPELINE TECHNOLOGY

Delivery Programm

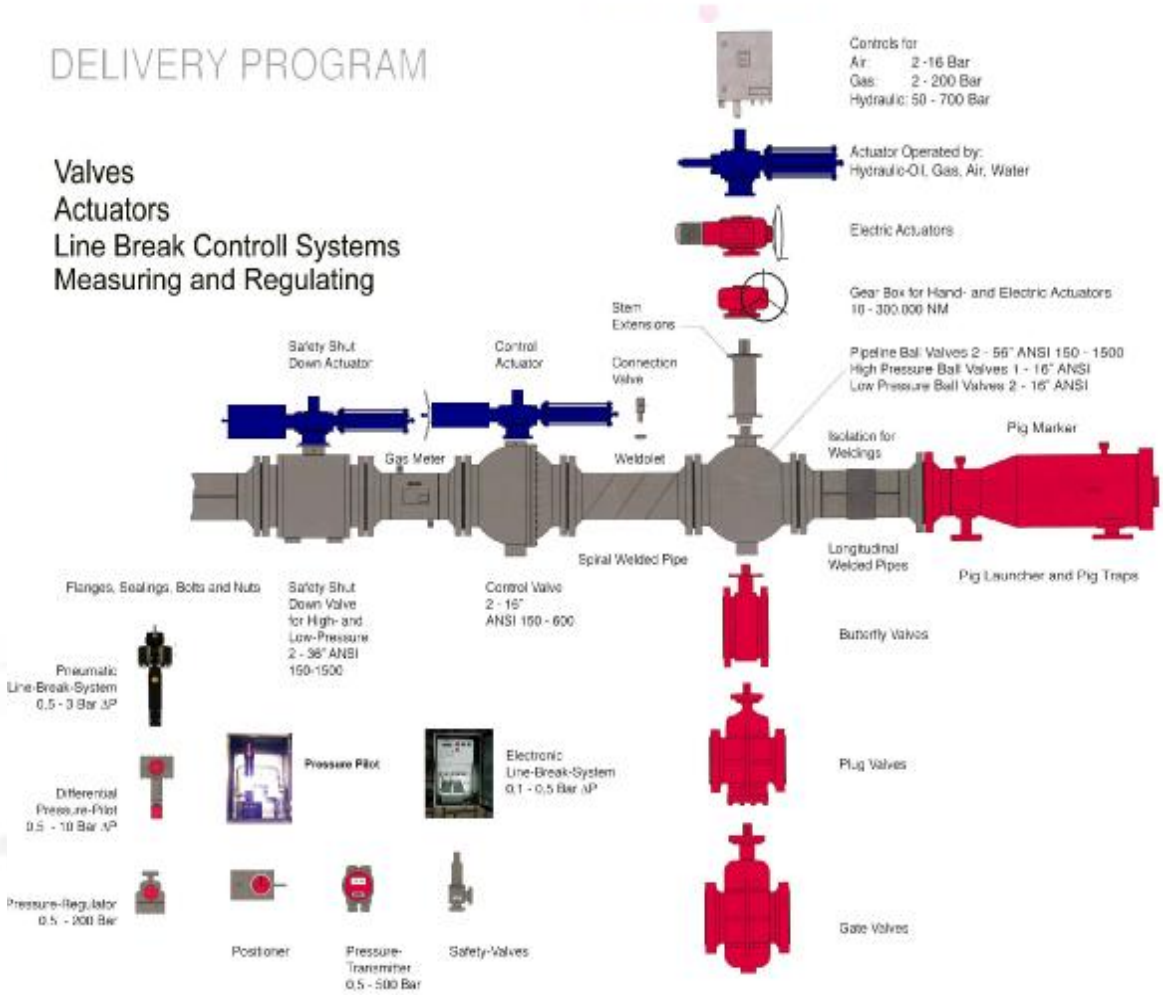

- **Ball Valves**
- **Plug Valves**
- **Gate Valves**
- **Safety Valves**
- **90° Actuators**
- **Linear Actuators**
- **Subsea Actuators**
- **Safety Shut Down**
- **Electro Hydraulic**
- **Gas Actuators**
- **Pneumatic Actuators**
- **Line Break Systems**
- **Profi Bus System**

start page

FASEK

homepage : www.fasek.com

email : austria@fasek.com

FASEK –PIPELINE TECHNOLOGY

PRODUCTS

MOUNTED UNITS FOR PIPELINES AND REFINERIES. ENERGY SOLUTIONS TOGETHER WITH TVP ENERGY SYTEMS BASED ON DIESEL, GAS, SOLAR AND WIND POWERED ENERGY SYSTEMS from 6 kW up to 2 MW. GAS STORAGE SYSTEMS, ...

GATE VALVES, CHECK VALVES, BUTTERFLY VALVES FLANGED OR PE-ENDS FOR WATER, GAS AND WASTE WATER

WELLHEADS AND CONTROLS, BALL VALVES, 2”-60” ANSI 150-2500, FULLY WELDED, SPLIT BODY, TOP ENTRY, GATE VALVES 2”-60”, EXPANDING AND SLAB TYPE,

BALL VALVES 2“-56“,ANSI 150-2500, FULLY WELDED AND SPLIT BODY, SOFT SEATED METAL TO METAL SEATED.
GAS COMPRESSOR UNITS, WELHEAD EQUIPMENT.

ACTUATORS FOR ONSHORE AND OFFSHORE 90° ROTARY ACTUATORS, LINEAR ACTUATORS
SINGLE ACTING, DOUBLE ACTING,
MODULATING ACTUATORS FOR AIR HIGH AND LOW PRESSURE, HYDRAULIC OIL HIGH AND LOW PRESSURE , GAS AND H_2S GAS OVER OIL,
LINE BREAK SYSTEMS, FIELD BUS SYSTEMS, SAFETY SHUT DOWN VALVES, SOLAR SYSTEMS, CO-GENERATION UNITS UP TO 2 MW BUILT IN STANDARD CONTAINERS.

LONGITUDINALLY WELDED PIPES FROM 2” TO 16” RAW BLACK OR PE COATED, CEMENT COVERED FOR WATER, GAS AND OIL BUSINESS. (20 – 60” ON REQUEST)

start page

homepage : www.fasek.com email : austria@fasek.com

FASEK –PIPELINE TECHNOLOGY

BALL VALVES ½“-16“, ANSI 150-2500, SOFT SEATED / METAL TO METAL SEATED, SPLIT BODY, TOP ENTRY, PIG VALVES,

BALL VALVES ½“-20“, ANSI 150-600, SOFT SEATED / METAL TO METAL SEATED, FILTERS, SAFETY VALVES, THREE WAY VALVES,

VALVES AND ACCESSORIES FOR STORAGES AND REFINERY. FLOATING ROOFS, MEASURING EQUIPEMENT, TANK STORAGE VALVES;

GATE VALVES, GLOBE VALVES, SWING CHECK VALVES, FLANGES FITTINGS,

RAYCHEM INSULATION MATERIAL FOR PIPELINE PROTECTION WITH HEAT SHRINKING AND WRAPPING MATERIALS.

SAFETY VALVES, EMERGENCY SHUT DOWN VALVES, REGULATING VALVES,

ALL OUR PRODUCTS ARE IN FUNCTION ALL OVER THE WORLD AND MANUFATURED AND TESTED IN ACCORDANCE TO NATIONAL AND INTERNATIONAL REGULATIONS (API,DIN,...) .THE QUALITY CERTIFICATION STANDARD IS IN ACCORDANCE TO ISO 9000 OR SIMILAR.

DELIVERY PROGRAM IS NOT THE SAME IN EACH COUNTRY, SO PLEASE DON`T HESITATE TO CONTACT ONE OF OUR SALES OFFICES NEXT TO YOU FOR DETAILED INFORMATION.

start page

homepage : www.fasek.com

email : austria@fasek.com

FASEK –PIPELINE TECHNOLOGY

TARGETS

FASEK IS ESTABLISHED TO ASSIST THE CUSTOMERS WITH INDIVIDUAL **CONSULTING** AND A PERFECTLY ESTABLISHED **SALES** ORGANISATION AS WELL AS INNOVATIVE AND EFFICIENT **ENGINEERING** . TOGETHER WITH OUR PRODUCERS WE ARE PREPARED FOR OUR MAIN TASK –
" TO SATISFY OUR CUSTOMER" AND TO BE A RELIABLE PARTNER IN ENERGY INDUSTRY.

WE HOPE THAT OUR INTRODUCTION WAS OF INTEREST AND FOR ANY FURTHER INFORMATIONS DON'T HESITATE TO CONTACT US IMMEDIATELY.

PHONE: +43 2236 35291
FAX : +43 2236 35292
EMAIL :AUSTRIA@FASEK.COM

PHONE: +49 4261 8408 0
FAX : +49 4261 8408 40
EMAIL :GERMANY@FASEK.COM

FASEK ENGINEERING AND PRODUCTION GMBH
AUSTRIA

ING. R. MAHLBERG
MARKETING AND SALES
MOBIL:+43 664 14 28 900

FASEK –PIPELINE TECHNOLOGY

PACKAGE SOLUTIONS

VALVE STATION

Units

Prefitted Equipment

Skidmoduls

Pipelinemoduls

Fasek range of activities :

Construction Support

Supply

Erection

Commissioning

Service

- o **8“ - 56“, DN 200 - 1400**
- o **ASME 150 – 1500, PN 20 - 250**
- o **Automatic actuators,**
- o **Manual operated,**
- o **DIN, ANSI, ASME, AD**
- o **Underground**
- o **Above ground**
- o **Metal to metal**
- o **Soft seated**

start page

FASEK

homepage : www.fasek.com

email : austria@fasek.com

FASEK –PIPELINE TECHNOLOGY

Valve Station

Use in gas pipeline systems where the line has to be split in sections or in surrounding pipe work of gas storage systems and in plant pipe work in high pressure gas lines

Advantages

- Prefabricated transportable units
- Less mounting and fitting on site
- Completely shop tested
- Standardised construction
- Easy to transport

start page

FASEK

FASEK –PIPELINE TECHNOLOGY

Valve Station

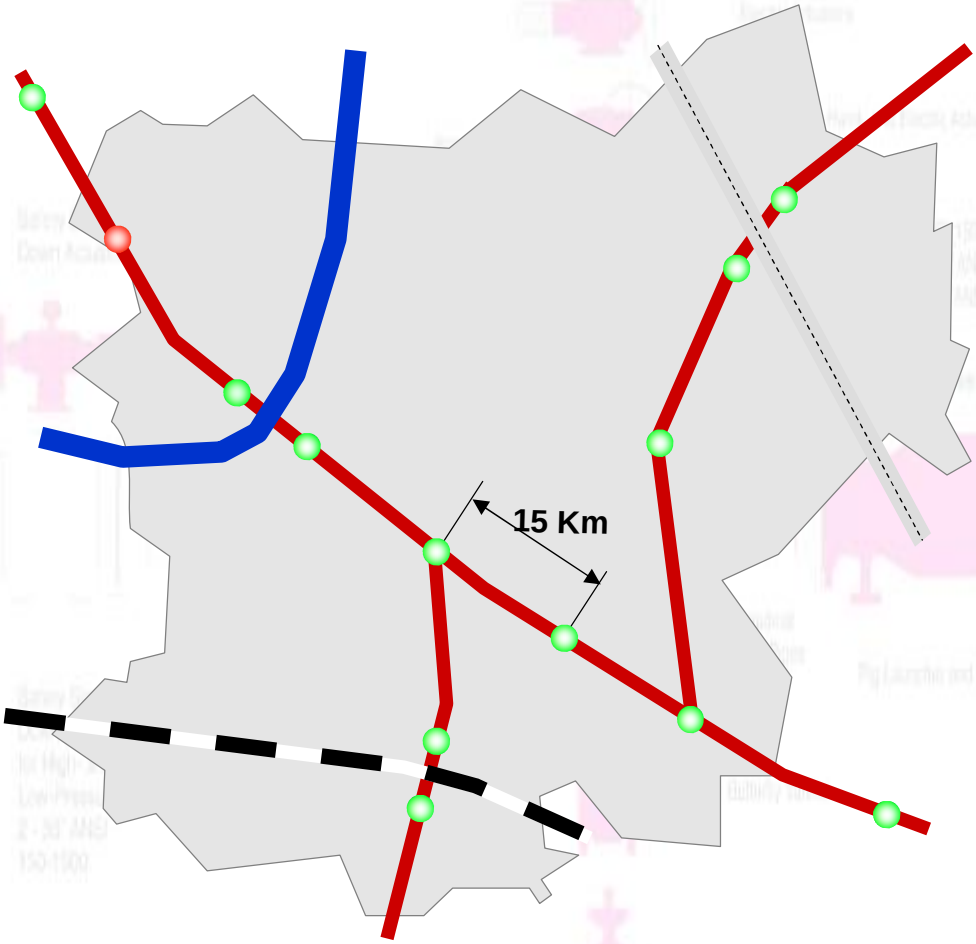

River- crossing

Highway- crossing

Railway- crossing

Distribution Station

Compressor Station

Pipeline SectionsE

start page

FASEK

homepage : www.fasek.com

email : austria@fasek.com

FASEK –PIPELINE TECHNOLOGY

Valve Station

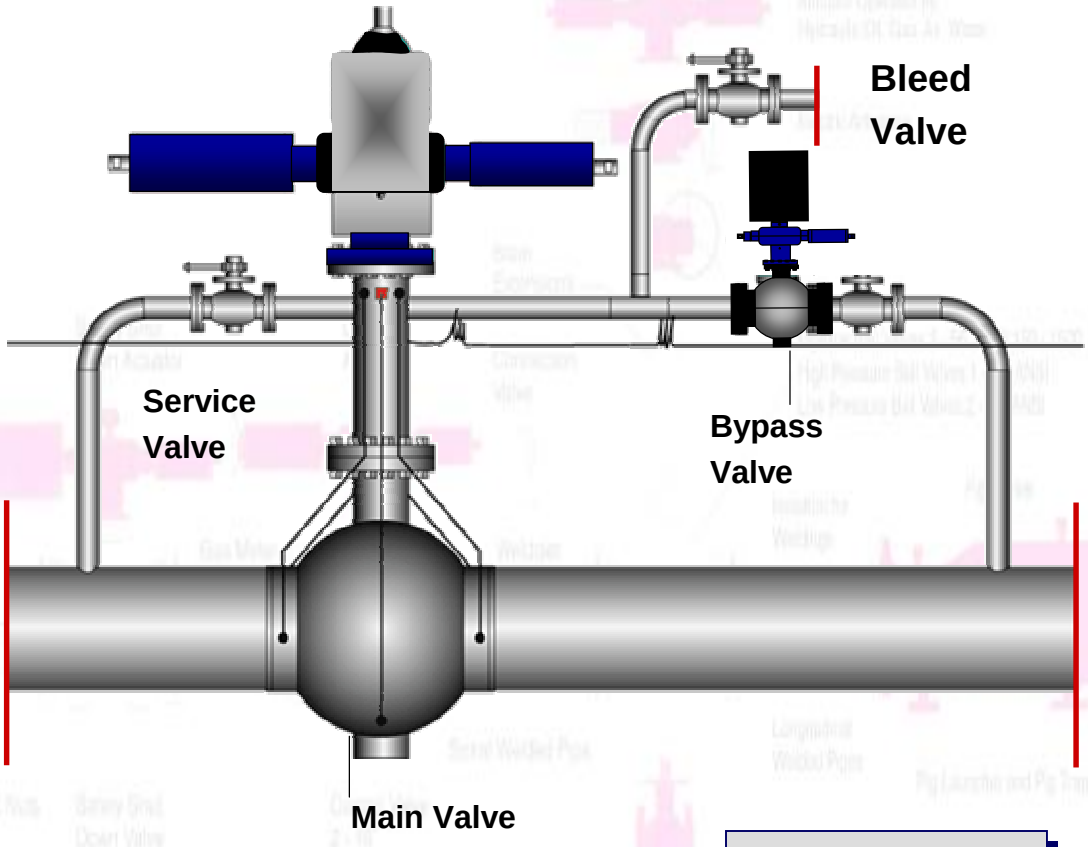

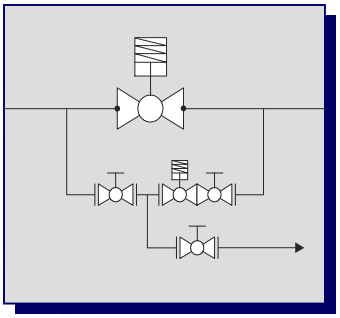

Advantages

- Prefabricated transportable units
- Less mounting and fitting on site
- Completely shop tested
- Standardised construction
- Easy to transport

start page

FASEK

homepage : www.fasek.com

email : austria@fasek.com

FASEK –PIPELINE TECHNOLOGY

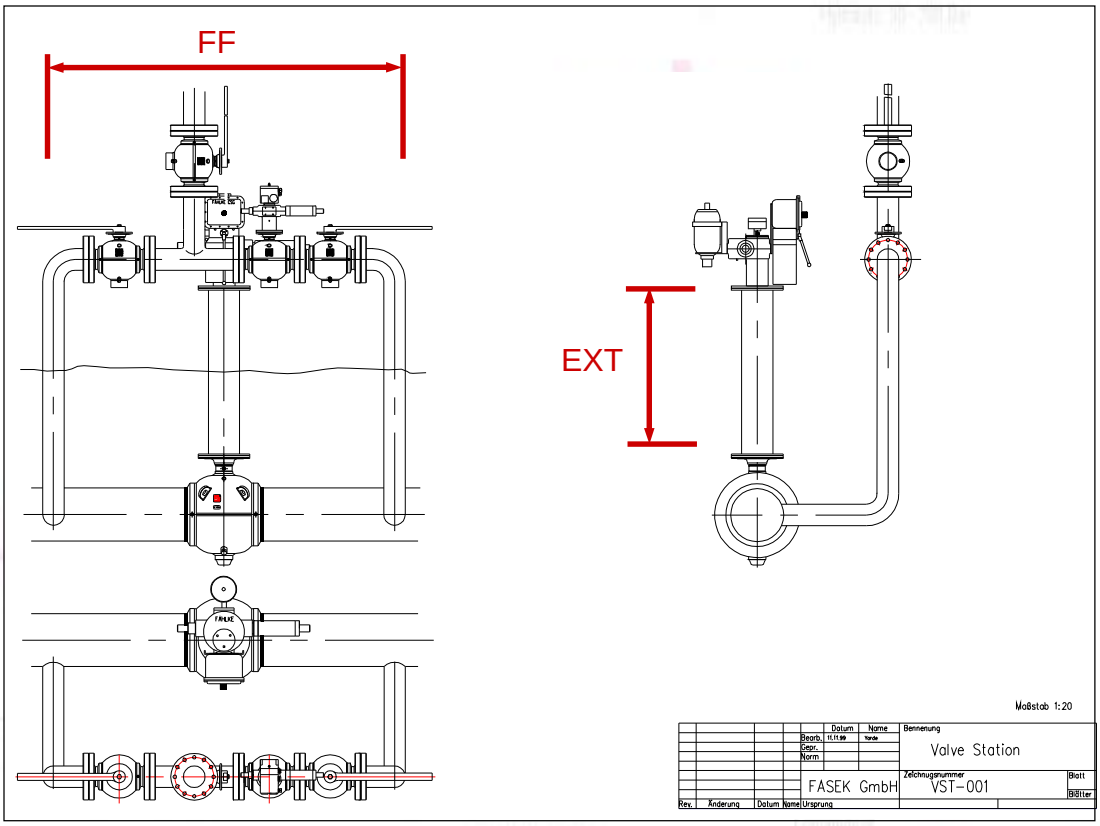

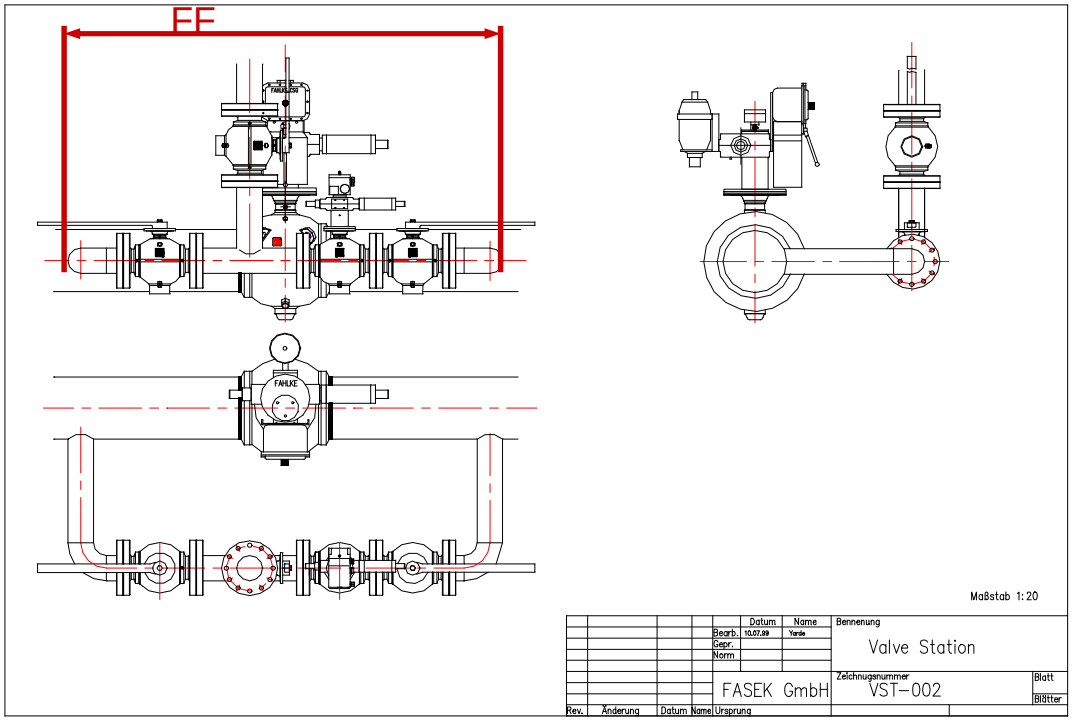

start page

FASEK

homepage : www.fasek.com

email : austria@fasek.com

FASEK –PIPELINE TECHNOLOGY

Measuring and Regulation

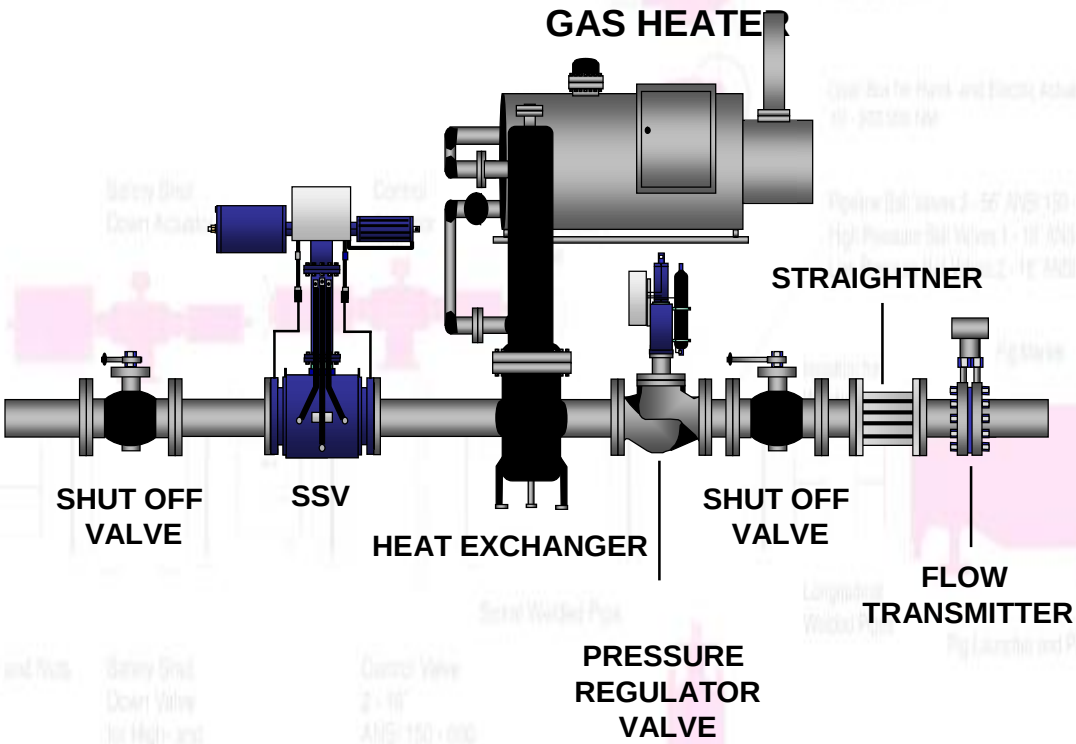

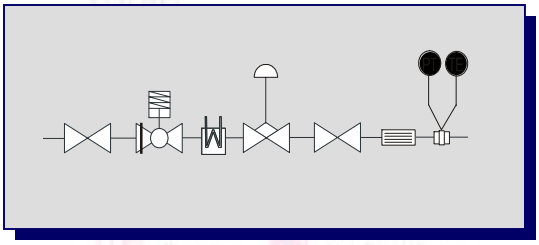

Part list

Clients requirements

Standards

Regulations

Specifications

start page

FASEK

homepage : www.fasek.com

email : austria@fasek.com

FASEK –PIPELINE TECHNOLOGY

PACKAGE SOLUTIONS

FILTER SEPERATOR STATION

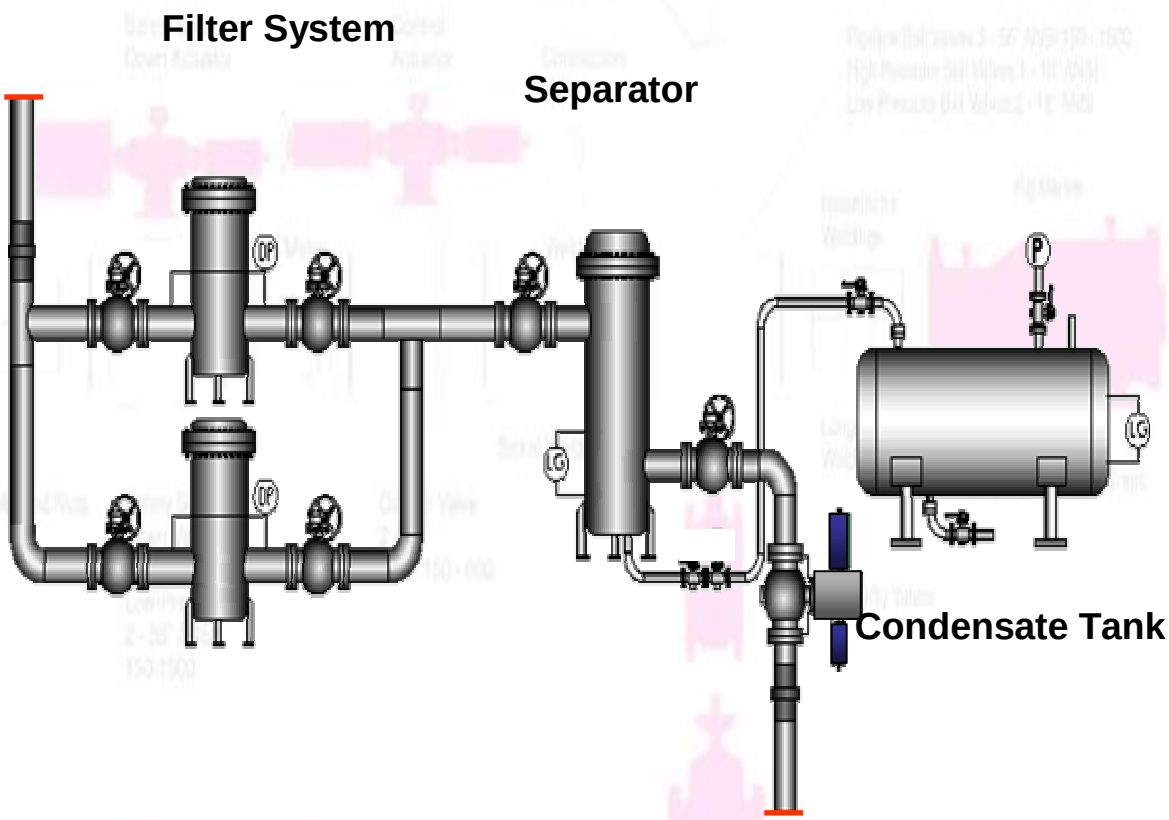

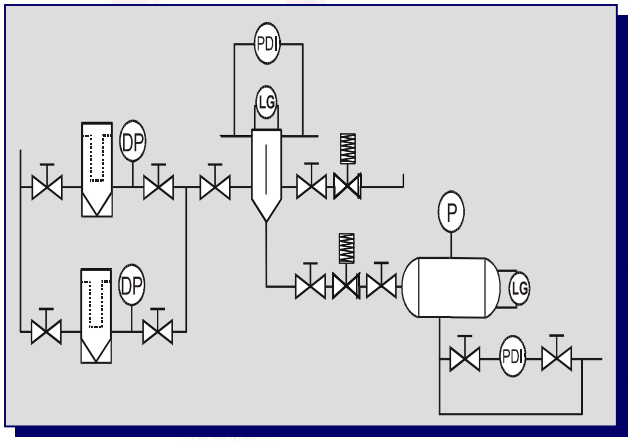

start page

FASEK

homepage : www.fasek.com

email : austria@fasek.com

FASEK –PIPELINE TECHNOLOGY

PACKAGE SOLUTIONS

Scraper Trap Station

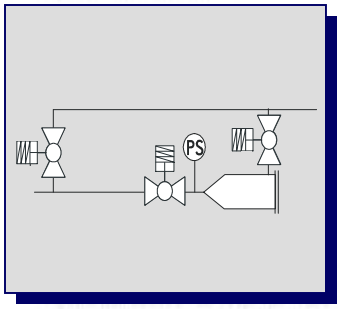

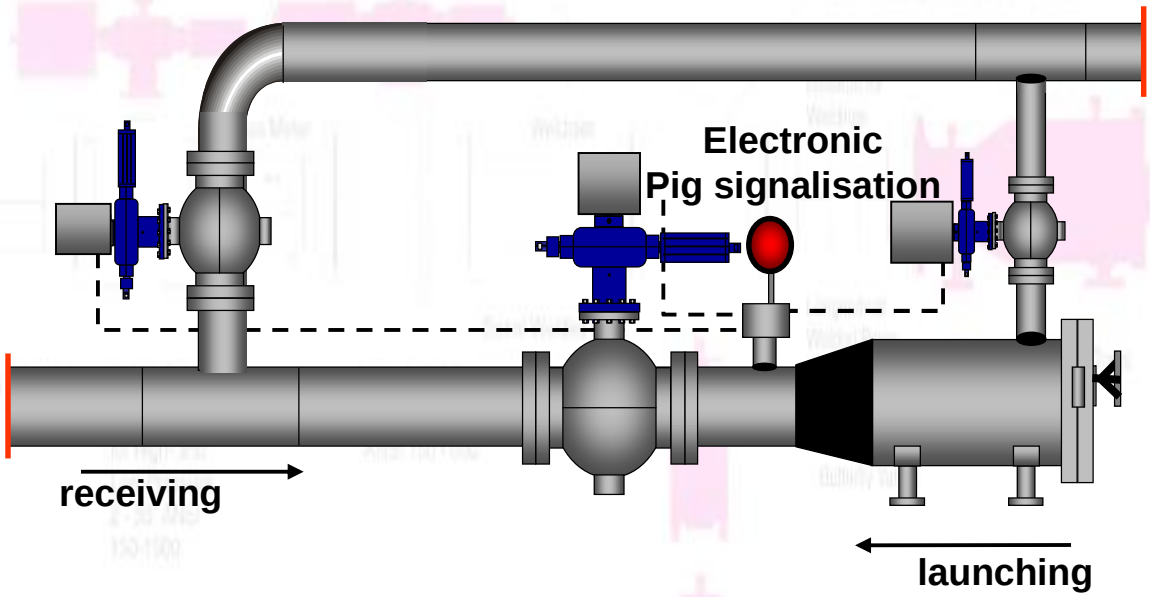

Advantages:

- **Skid mounted for smaller sizes**
- **Prefabricated and completely equipped with valves, signaliser and other equipment.**
- **Completely tested**
- **Low cost work on site**

start page

FASEK

homepage : www.fasek.com

email : austria@fasek.com

FASEK –PIPELINE TECHNOLOGY

INNOVATION OF TECHNOLOGY

GAS-TECHNOLOGY & COGENERATION

with decentralized container power plants

ENERGY SYSTEMS GMBH

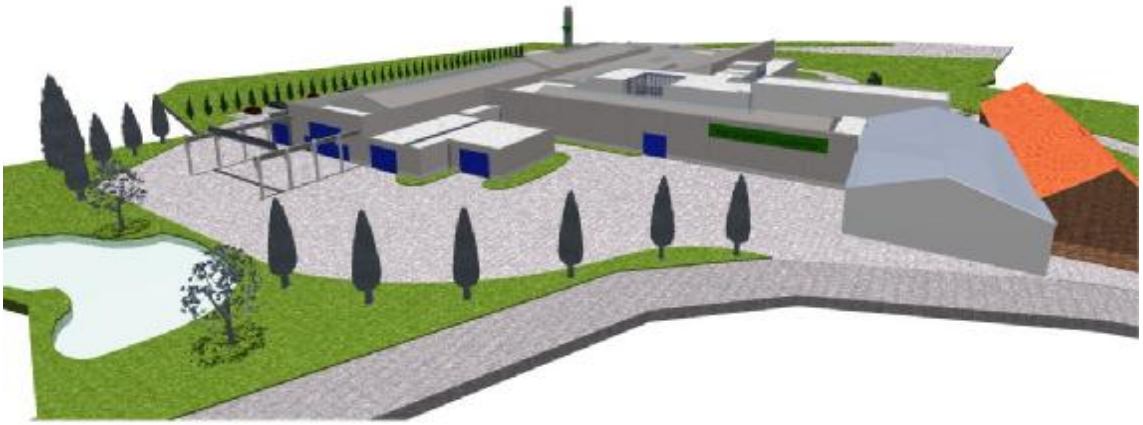

start page

FASEK

homepage : www.fasek.com

email : austria@fasek.com

FASEK –PIPELINE TECHNOLOGY

INNOVATION OF TECHNOLOGY

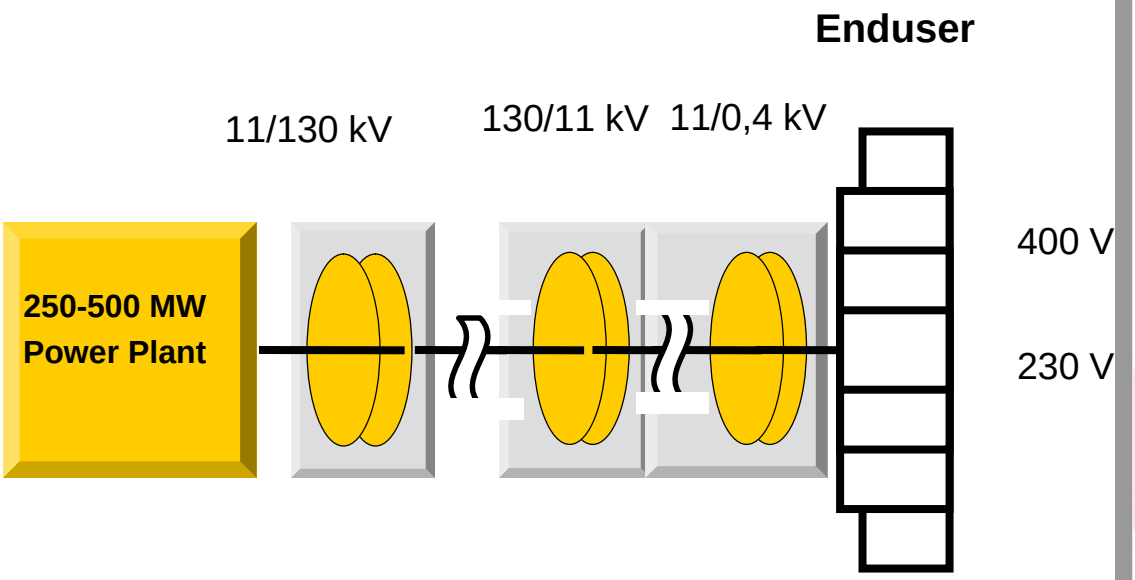

- Long planning time
- Long time of construction
- High engineering costs
- High material investment
- 70% lost heat
- High costs for distribution of lost heat
- 30% electric power output
- Unflexible system

- High net investment costs
- 15% electric power loss
- Dependance on 1 Power Plant

start page

FASEK

FASEK –PIPELINE TECHNOLOGY

ENERGY SAVING WITH COGENERATION SYSTEMS

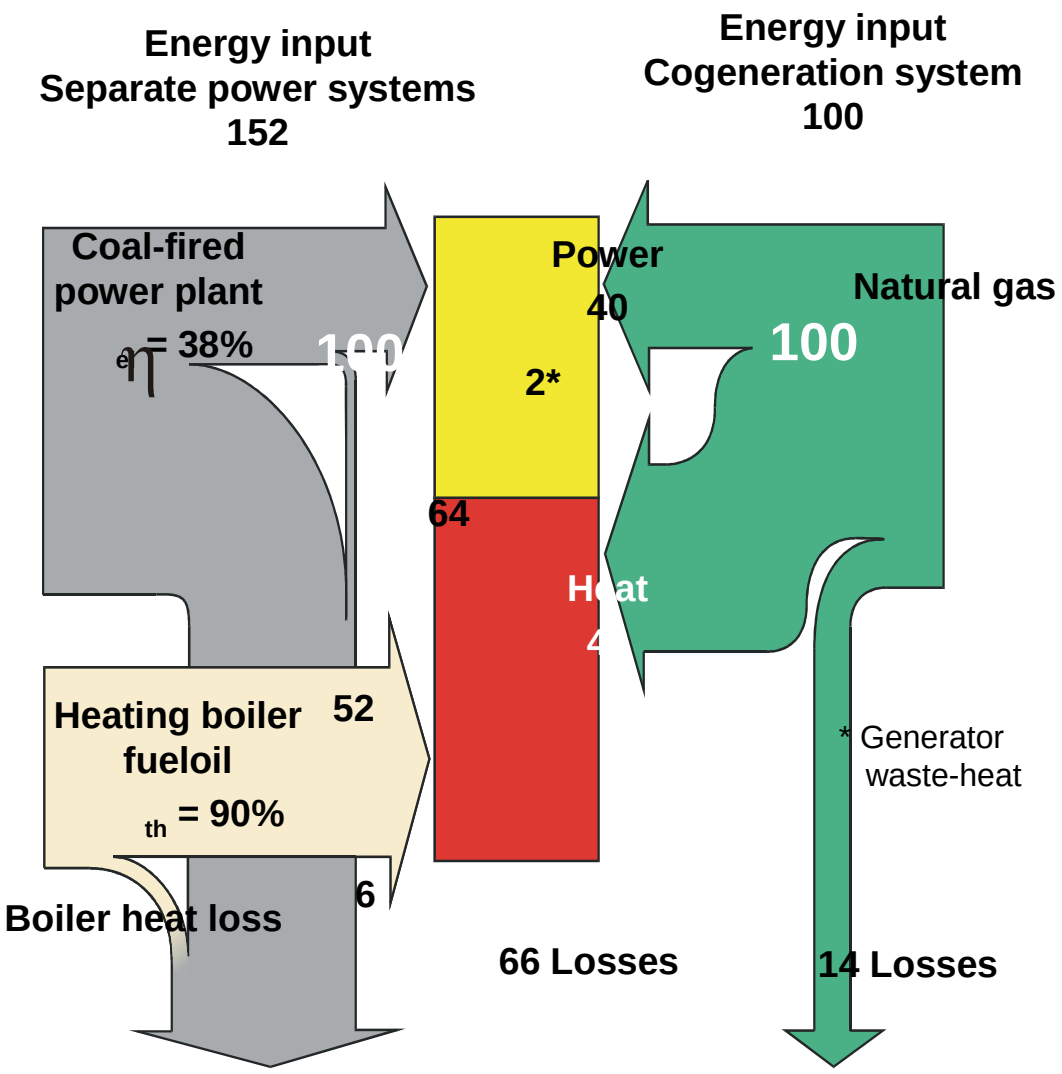

Prevented CO_2-emission 58%

Saved primary energy $\frac{52}{152}$ 34%

start page

FASEK

homepage : www.fasek.com

email : austria@fasek.com

FASEK –PIPELINE TECHNOLOGY

ADVANTAGES OF CONTAINER POWER PLANT

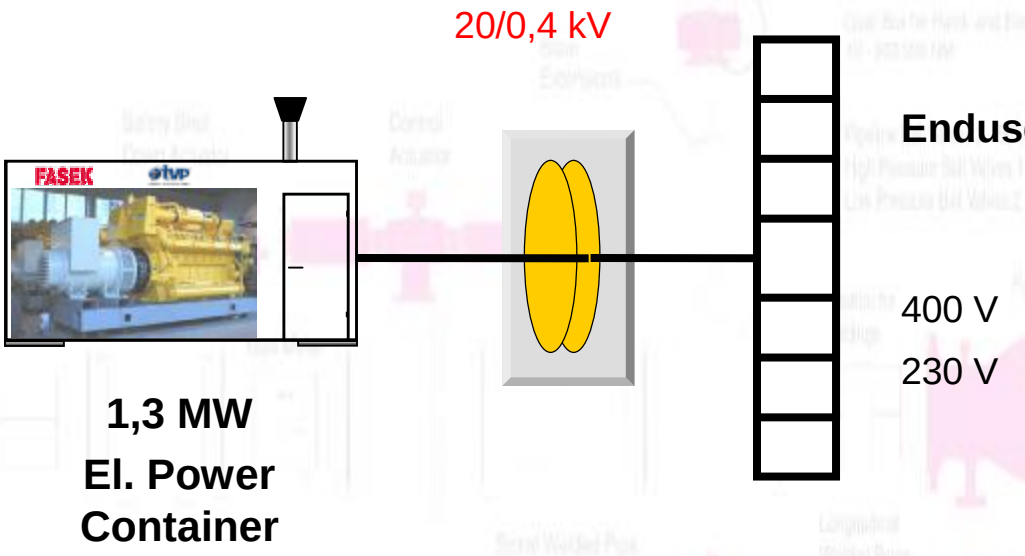

- compact solutions
- short planning time
- standard construction and design
- short delivery time (5 months)
- fast mounting and putting into operation
- low engineering costs
- low preliminary costs
- low transport costs
- ecological friendly system
- low investment costs
- minimum electric power loss
- direct use of thermal power
- easy protection against flood
- simple maintenance work
- flexible modular-container-system
- fail-safe power supply

start page

FASEK

homepage : www.fasek.com

email : austria@fasek.com

FASEK –PIPELINE TECHNOLOGY

MODULAR SOLUTION OF CONTAINER POWER PLANT

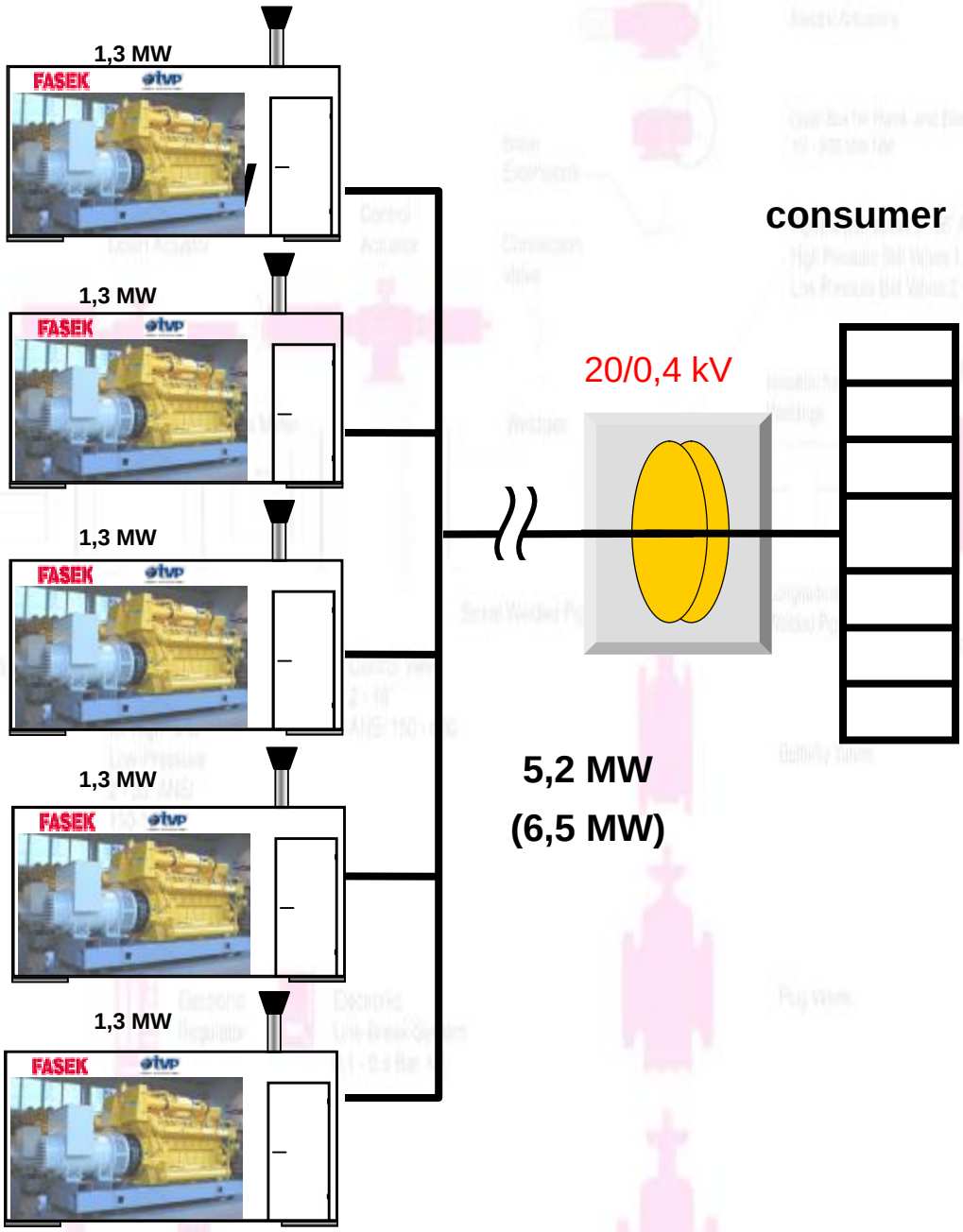

If energy consumption changes more or less containers will start working according to requirements!

start page

FASEK

homepage : www.fasek.com

email : austria@fasek.com

FASEK –PIPELINE TECHNOLOGY

DELIVERY CONCEPT OF CONTAINER POWER PLANT

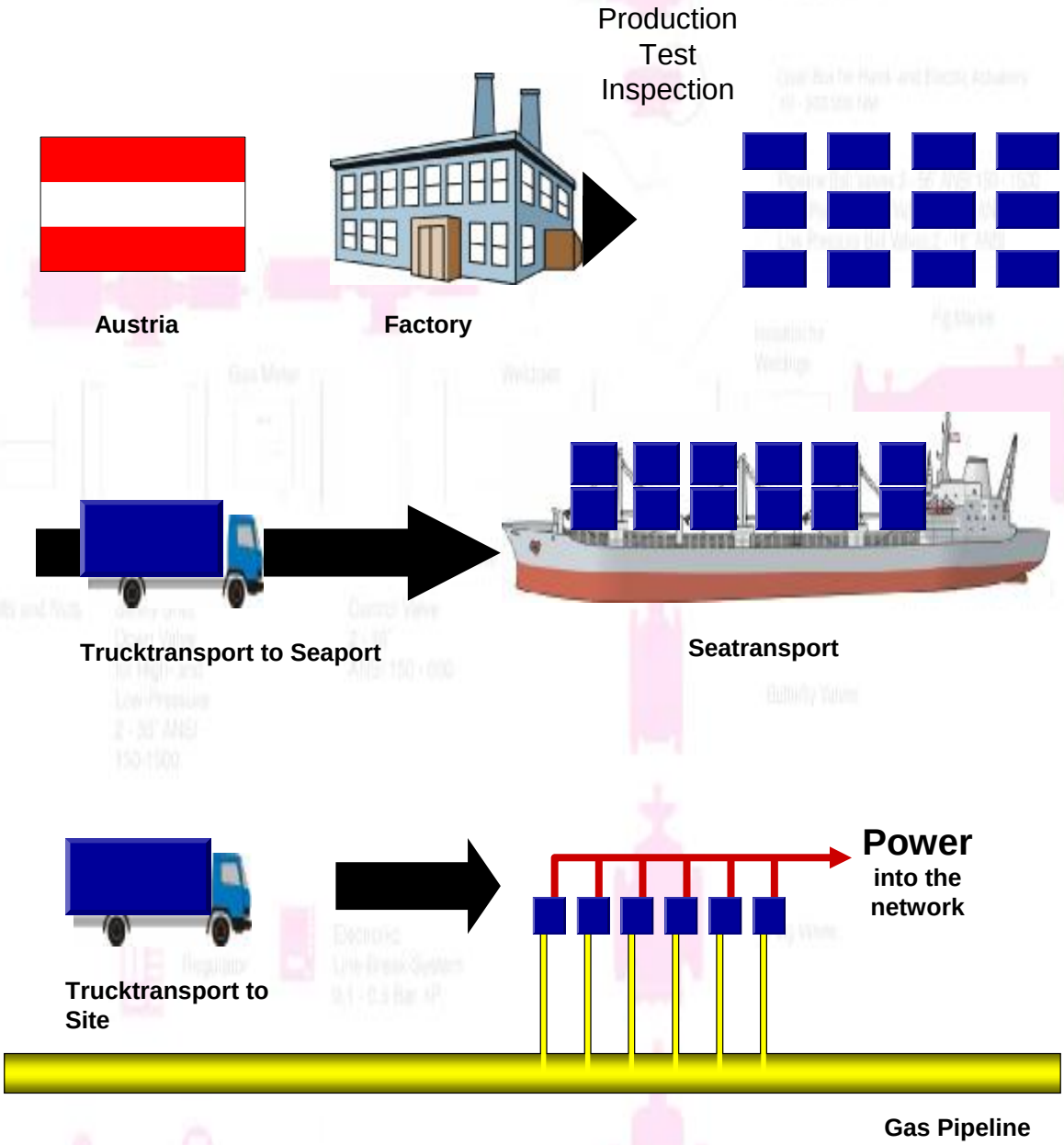

Start up 5 months after entry order!

start page

FASEK

homepage : www.fasek.com

email : austria@fasek.com

FASEK –PIPELINE TECHNOLOGY

PRIMARY ENERGY AND APPLICATION

(Hu: kWh/Nm^3):

1. Propane Gas (25,9)
2. Flare Gas (11,0)
3. Dead Well Gas (10,5)
4. Natural Gas (10,0)
5. Sewage Gas (6,5)
6. Biogas (6,5)
7. Landfill Gas (5,0)
8. Pit Gas (4,0)
9. Diesel (11,4 kWh/kg)

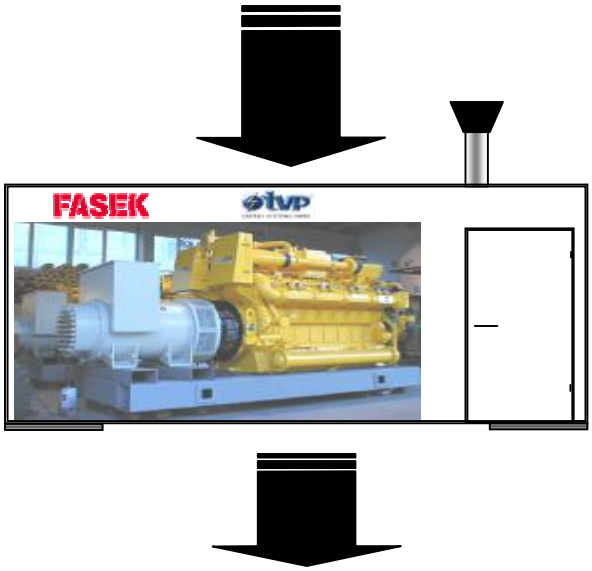

1. Electrical Energy
2. Steam
3. Hot Water
4. Cooling

Application:

housing complexes
hospitals, stadiums
hotelresorts
industrial companies
small villages and towns
onshore, offshore plants
supply into local grid (0,4 kV - 20 kV)

start page

FASEK

homepage : www.fasek.com

email : austria@fasek.com

FASEK –PIPELINE TECHNOLOGY

POWER GENERATION WITH GAS FROM DEAD WELL

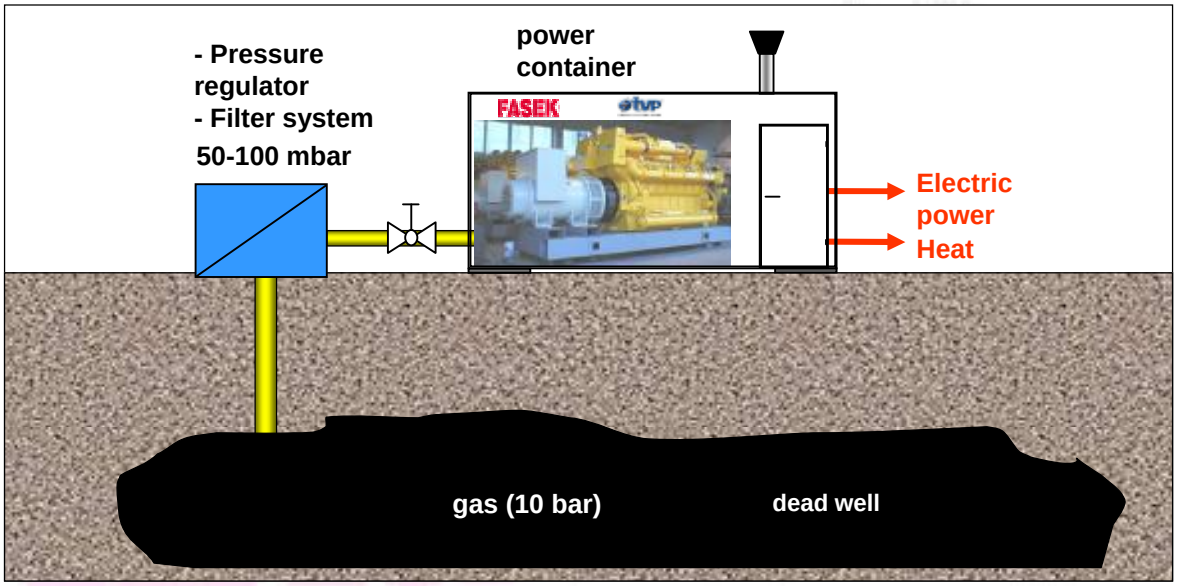

POWER GENERATION WITH GAS FROM OIL WELL

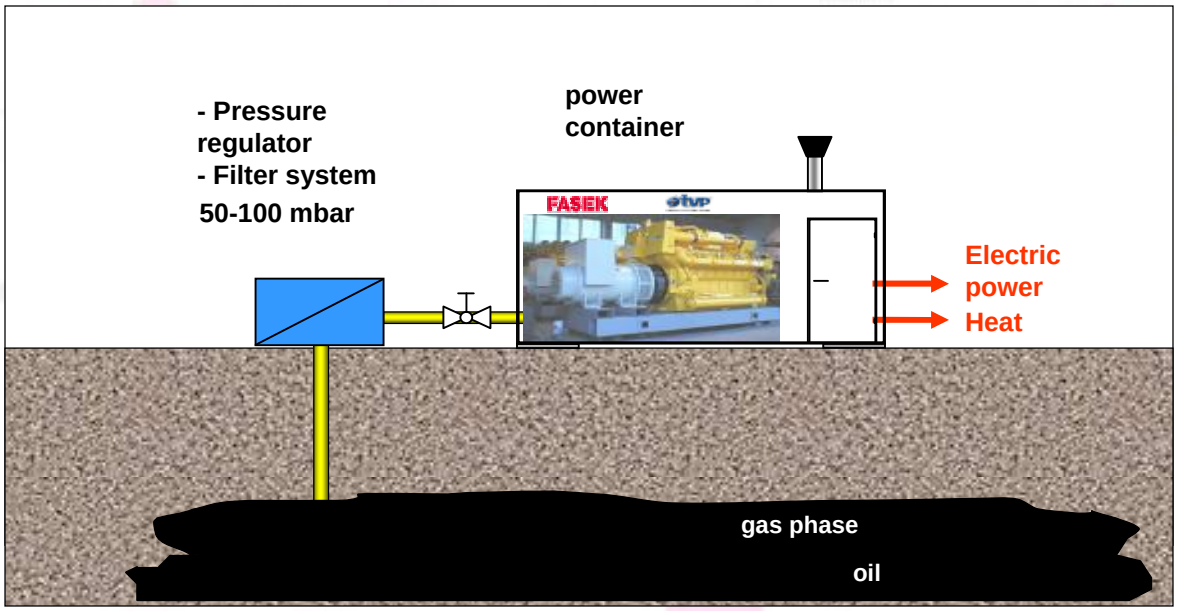

• investment per MW elec.	: 1,1 Mio. €
• gas costs	: 0,06 €/Nm³
• specific maintenance costs	: 0,008 €
• return of investment	: 2 years
• calorific value	> 4 kWh/Nm³
• sulphur content	< 500 ppm
• humidity	< 60% rel.
• gas temperature	+10 -60°C
• gas pressure	50 - 100 mbar
• gas consumption	200 - 500 Nm³/MW elec.

start page

FASEK

homepage : www.fasek.com

email : austria@fasek.com

FASEK –PIPELINE TECHNOLOGY

PIT GAS FROM COAL MINE

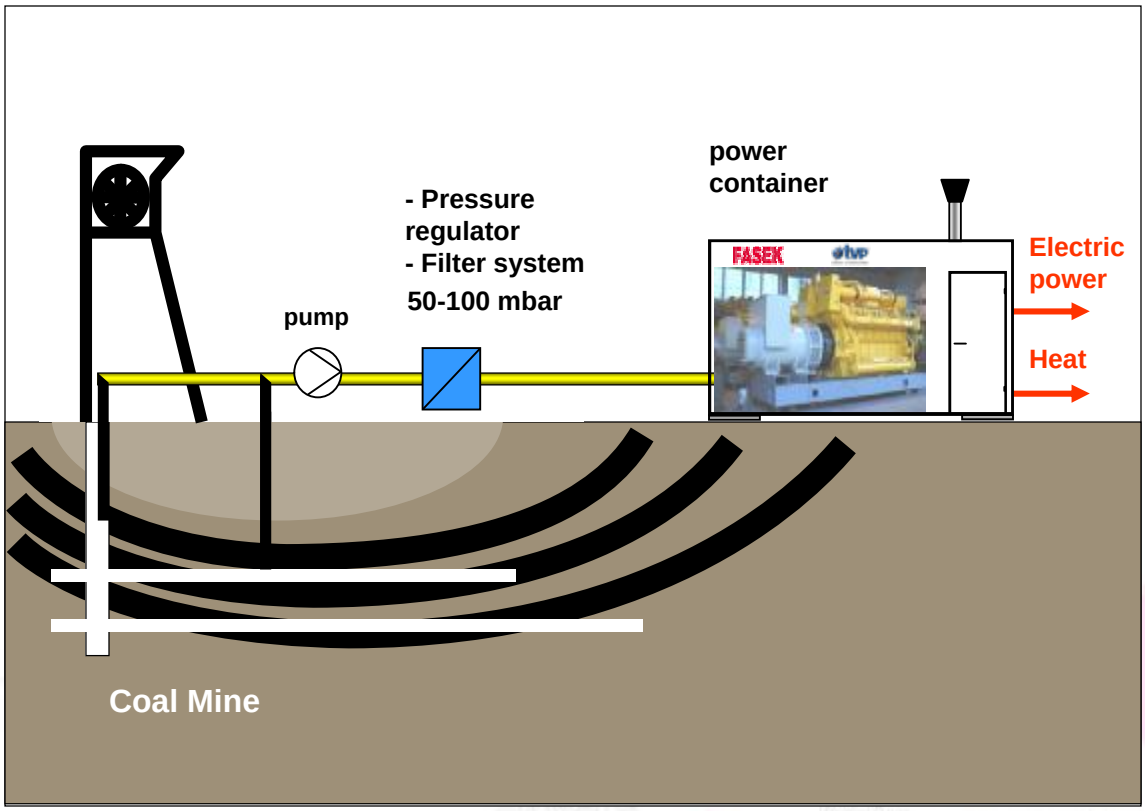

LANDFILL GAS FROM GARBAGE DUMP

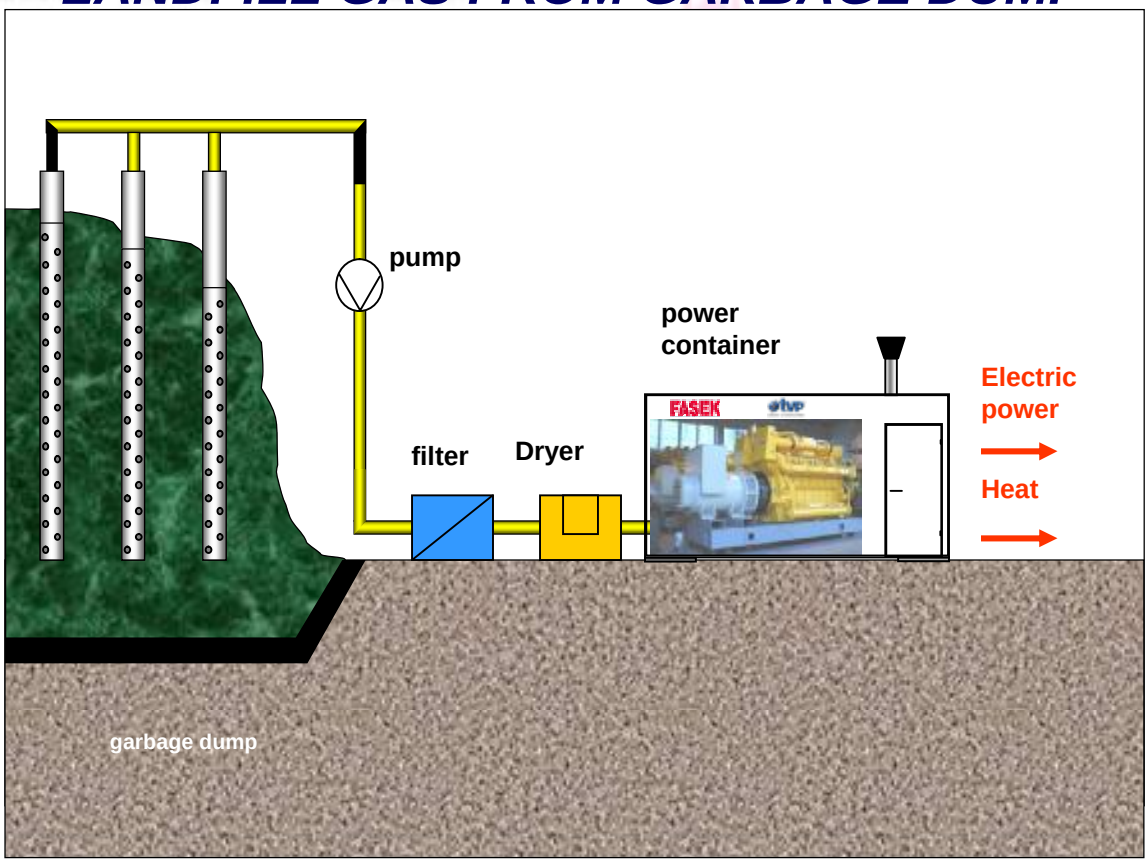

start page

FASEK

homepage : www.fasek.com

email : austria@fasek.com

FASEK –PIPELINE TECHNOLOGY

EXHAUST GAS-ABSORBER COOLING SYSTEM

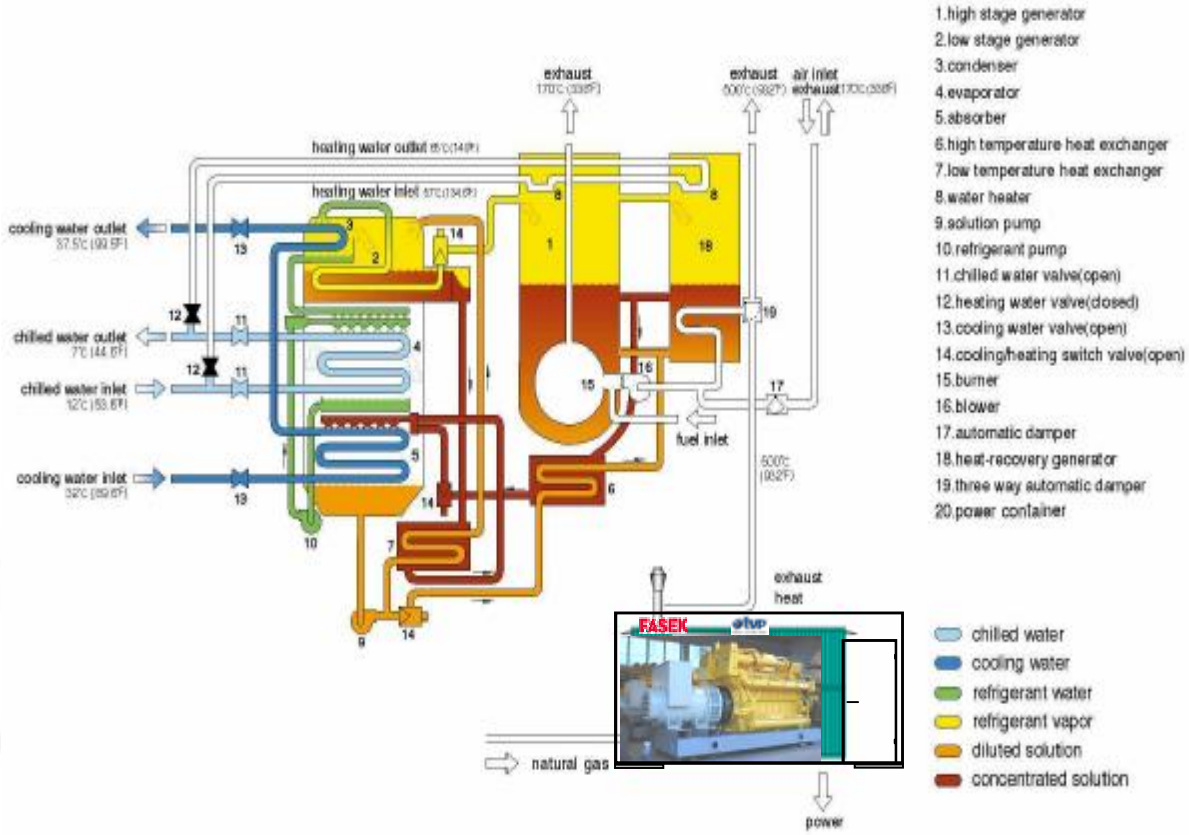

ADDITIONAL APPURTENANCE

filter systems

regulator systems

gas drying systems

low pressure gas storage system 10-50 mbar

gas flare system

desulphurization System

start page

FASEK

homepage : www.fasek.com

email : austria@fasek.com

FASEK –PIPELINE TECHNOLOGY

start page

FASEK

homepage : www.fasek.com

email : austria@fasek.com

FASEK PIPELINE TECHNOLOGY

Delivery Programme

I. Extent of delivery

Welding, constructions,

Container, Heat-Exchanger,

Fittings: Equal and Reducing Tee, Stoppeling tee,

Caps, Reducer,

Header, Manifolds, Separators, Filters, Slug Catcher,

Welded Pipes, Pipe Nozzels,

Repair Sleeves,

Scraper Traps (sending and receiving)

Diameter: DN 2” – DN 56”

Pressure: PN 16 – PN 300

II. Material – manufacturing

All standard – an high-grade-steels

III. Manufacturing - license

TÜV – AD – HP 0 and AD – WO

TÜV – TRD 4.2.4.

DS 952/2 Deutsche Bundesbahn

TÜV – Wien-Önorm M 7812 / Teil Stoomwezen, ISO 9002 (Audit by DAS Nederland) British Standard

DIN 18800 – SLV

FASEK PIPELINE TECHNOLOGY

Equal -, Reducing-, Split-Tee‘s ,

- according to all norms and customer specifications
- Pipe diameter 2" to 56“
- Branch dia. 2“ to 56“
- Wall thickness 6 to 120 mm
- Pressure 10 to 300 bar
- Material WStE 355, WStE 420, WStE 460 and similar material

FASEK –PIPELINE TECHNOLOGY

TEE PIECE WITH PIG GUIDE PLATE

SPLIT TEE

start page

FASEK

homepage : www.fasek.com

email : austria@fasek.com

FASEK –PIPELINE TECHNOLOGY

INSULATION JOINTS

- PIPE DIAMETER 2 TO 40”
- PRESSURE 16 TO 100 BAR
- ELECTRICALLY TESTED UP TO 5.000 V / 50 HZ
- CONNECTION PIPE ACCORDING CUSTOMER SPECIFICATION

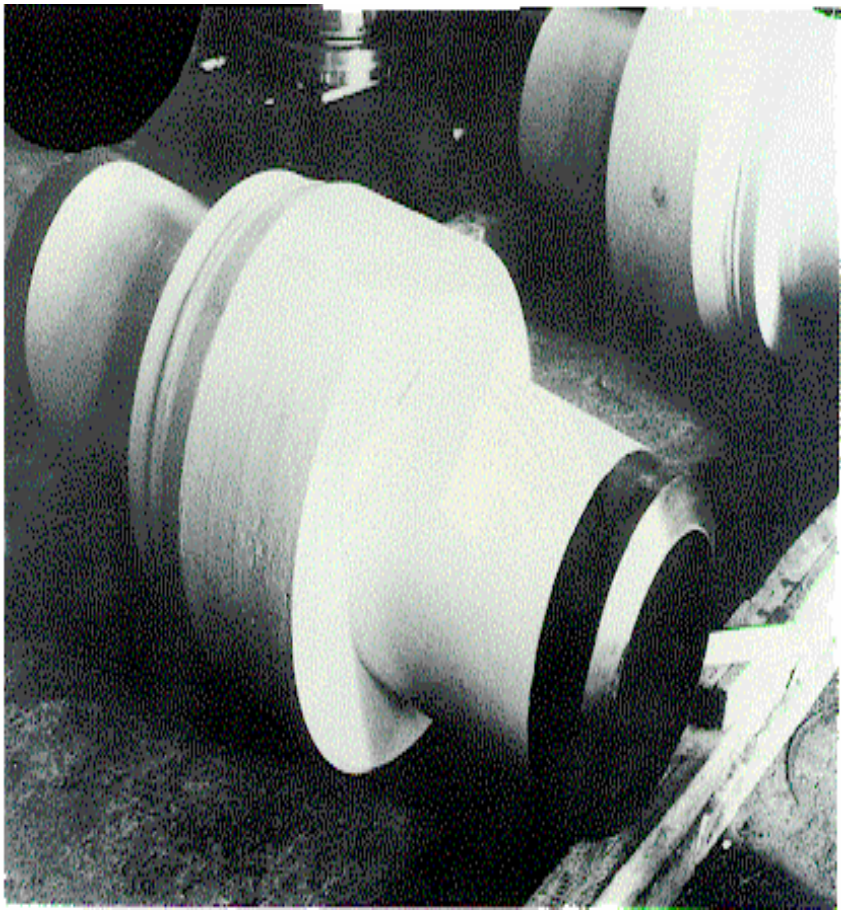

start page

FASEK

homepage : www.fasek.com

email : austria@fasek.com

FASEK –PIPELINE TECHNOLOGY

HEAT EXCHANGER

CAPS

HEADER

start page

FASEK

homepage : www.fasek.com

email : austria@fasek.com

FASEK –PIPELINE TECHNOLOGY

- **SCRAPERTRAPS FOR ALL TYPES OF PIGS**

- ACCORDING TO ALL NORMS AND CUSTOMER SPECIFICATIONS WITH BAYONET CLOSURE AND PIG SIGNAL
- STATIONARY AND TRANSPORTABLE
- DIAMETER 4” TO8"
- WALLTHICKNESS 6 TO 80 MM
- PRESSURE 10 TO 100 BAR
- MATERIAL WSTE 355, WSTE 420, WSTE 460 AND SIMILAR MATERIAL

start page

FASEK

homepage : www.fasek.com email : austria@fasek.com

FASEK –PIPELINE TECHNOLOGY

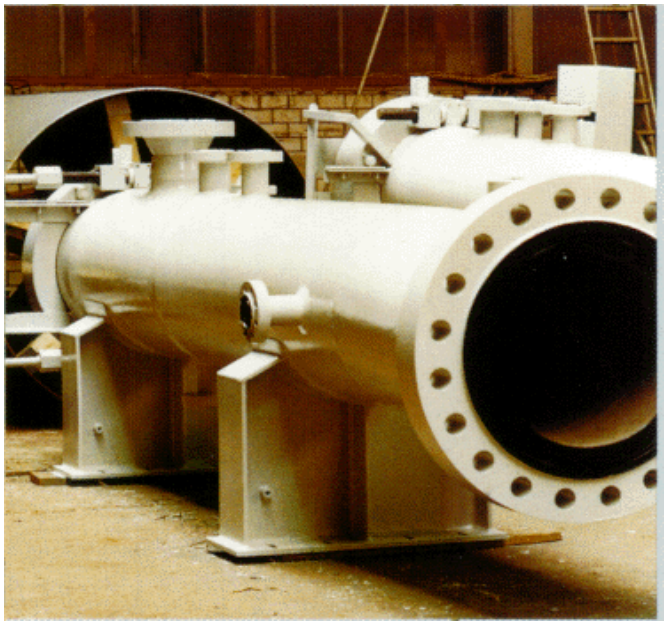

SCRAPER TRAP

DIAMETER:
2“ bis 56“

PRESSURE RANGE:
PN 16 - 300

start page

FASEK

homepage : www.fasek.com

email : austria@fasek.com

FASEK –PIPELINE TECHNOLOGY

REDUCER - CONCENTRIC / ECCENTRIC

- ACCORDING TO ALL NORMS AND CUSTOMER SPECIFICATIONS
- PIPE DIAMETER 1 to 2"
- PIPE DIAMETER 2 to 56"
- WALLTHICKNESS 6 to 80 MM
- PRESSURE 10 to 300 BAR
- MATERIAL WSTE 355, WSTE 420,

  WSTE 460 AND SIMILAR MATERIAL

start page

FASEK

homepage : www.fasek.com

email : austria@fasek.com

FASEK –PIPELINE TECHNOLOGY

VESSEL

10.000 LITER
250 BAR

ANNEALING

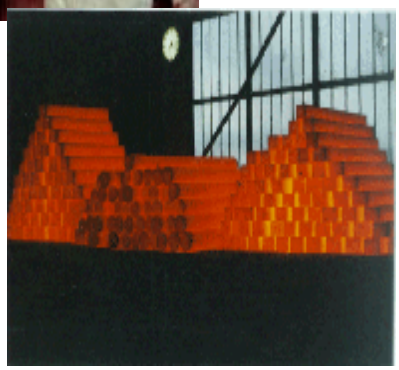

start page

FASEK

homepage : www.fasek.com

email : austria@fasek.com

FASEK –PIPELINE TECHNOLOGY

HEADER

SKID MOUNTED UNIT

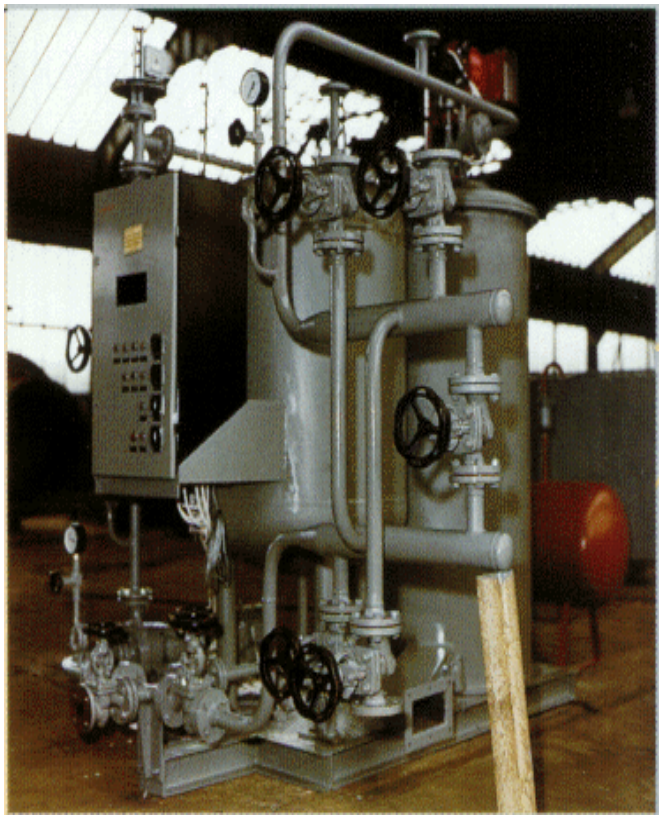

start page

FASEK

homepage : www.fasek.com

email : austria@fasek.com

FASEK –PIPELINE TECHNOLOGY

FASEK ACTUATOR TECHNOLOGY

In our factory in Germany we produce all kinds of actuators as gas, gas over oil, pneumatic and electro hydraulic actuators. Beside the actuators we manufacture line break systems, safety shut down valves, pressure control equipment., and so on.

Actuators for onshore and offshore 90° rotary actuators, linear actuators single acting, double acting,

Modulating actuators for air high and low pressure, hydraulic oil high and low pressure , gas over oil,

Line break systems, field bus systems, safety shut down valves,

Fasek is present to assist the customers with individual **consulting** and a perfectly established **sales** and **service** organisation as well as innovative and efficient **engineering** . We are prepared for our main task – **“ to satisfy our customer”** and to be a reliable partner in energy industries

start page

FASEK

FASEK –PIPELINE TECHNOLOGY

PRODUCTION RANGE

Actuators :

- FPA– Pneumatic Actuators
- FGA– Gas Actuators
- FGOA– Gas over Oil Actuators
- FEHA– Electro Hydraulic Actuators
- FESD– Emergency shut down Actuators
- FEG– Regulating Actuators

start page

FASEK

homepage : www.fasek.com

email : austria@fasek.com

FASEK –PIPELINE TECHNOLOGY

PRODUCTION RANGE

Housings :

Scotch yoke actuators up to 600.000 NM

Rack and pinion actuators up to 3700 NM

Linear actuators up to 5.500.000 N (hydraulic), 1.800.000 N (pneumatic)

5 different sizes of housings enable us to meet the customers requirement regarding torque and size

Cylinders :

Pneumatic / 12 bar,

Gas/Hydraulic / 210 bar

Spring cartridge

The modular cylinder system opens a wide range of applications

Controls :

Pneumatic Controls up to 20 bar

Gas / Hydraulik Controls up to 500 bar

Controls and line break systems are produced by Fasek.

Assembling and testing of the complete actuator unit is also done by Fasek in Germany.

start page

FASEK

homepage : www.fasek.com

email : austria@fasek.com

FASEK –PIPELINE TECHNOLOGY

PRODUCTION RANGE

Control parts :

Solenoid valves

Pressure Pilots (low and high)

Line Break Systems (pneumatic)

Line Break Systems (Electronic)

Differential Pressure Pilots

Pressure Regulators

Filter

Air Line Lubricator

Control parts are mounted on a manifold to ensure leakage free installation and easy maintenance work.

start page

FASEK

FASEK –PIPELINE TECHNOLOGY

CONTROL SYSTEMS

Modular block technology offers
a wide range of applications.

Nearly every requirement and individual design is possible

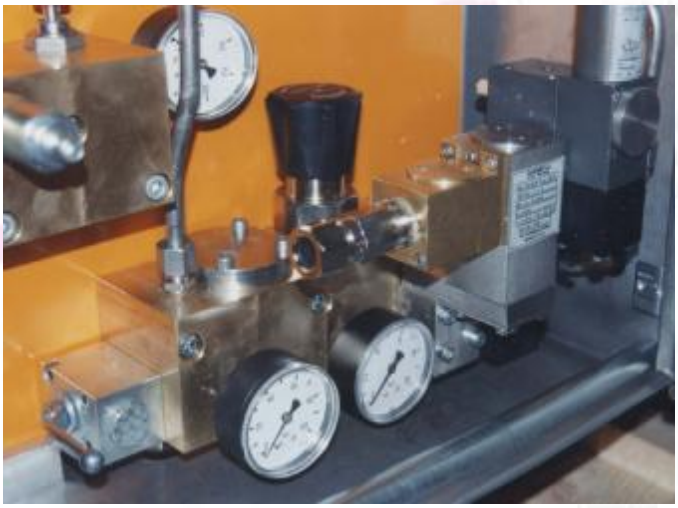

Gas, Hydraulic,Air controlsfrom 2 to 500 bar

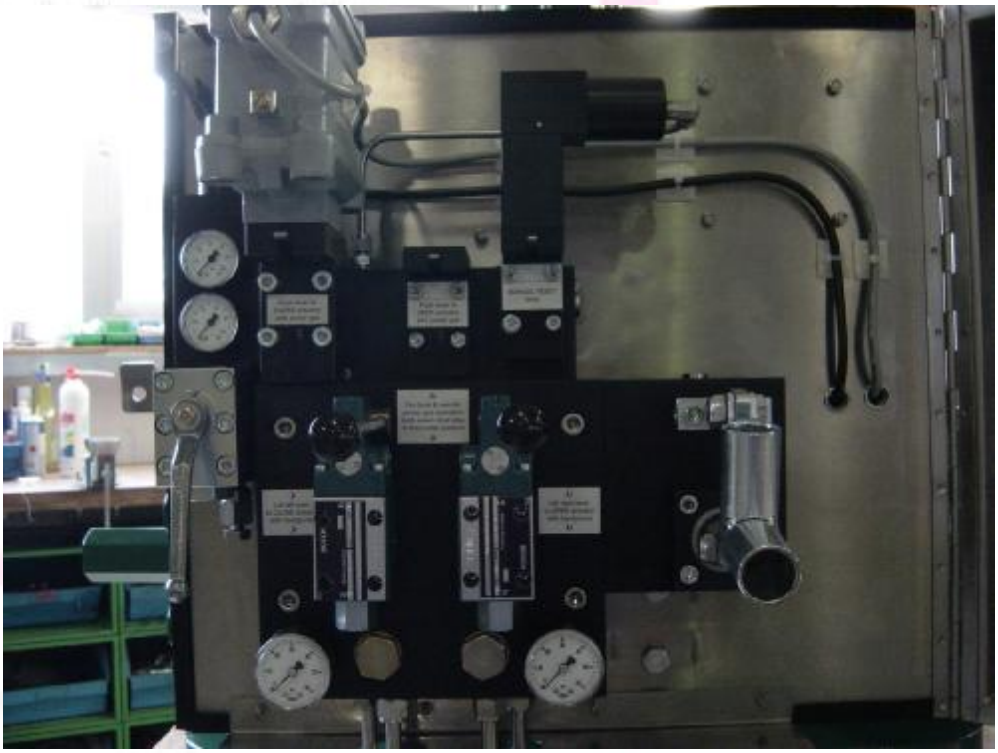

start page

FASEK

homepage : www.fasek.com

email : austria@fasek.com

FASEK –PIPELINE TECHNOLOGY

SCOTCH YOKE

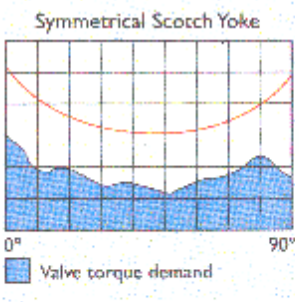

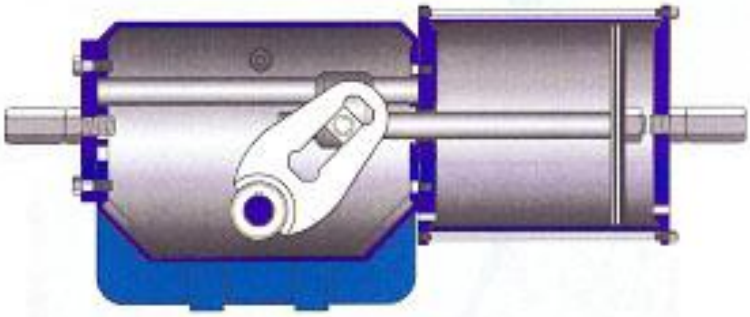

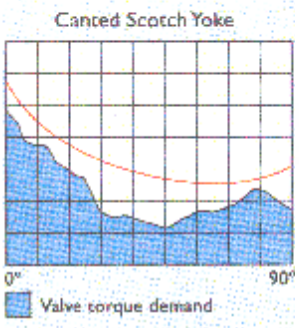

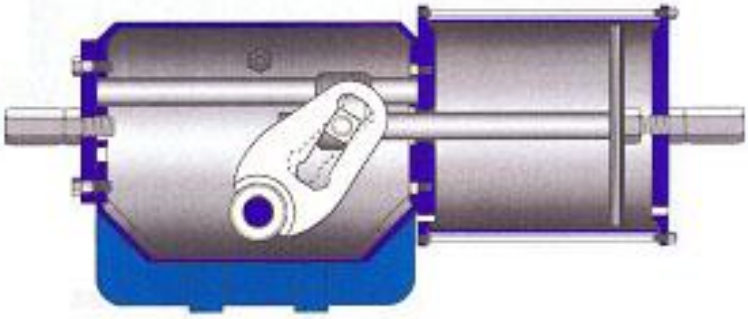

The scotch yoke system with modular cylinder system and flexible adaptation to the valve give us the opportunity to mount the actuators on any kind of 90° valve between 2 and 60“.

Mounting position can be realized in any position (horizontal or vertical)

The housing system layout is done for minimum 200 000 actuations and tested against full differential pressure.

For this mechanical part of the actuator we use the well proven technology from Rotork actuator systems.

start page

homepage : www.fasek.com

email : austria@fasek.com

FASEK –PIPELINE TECHNOLOGY

SCOTCH YOKE

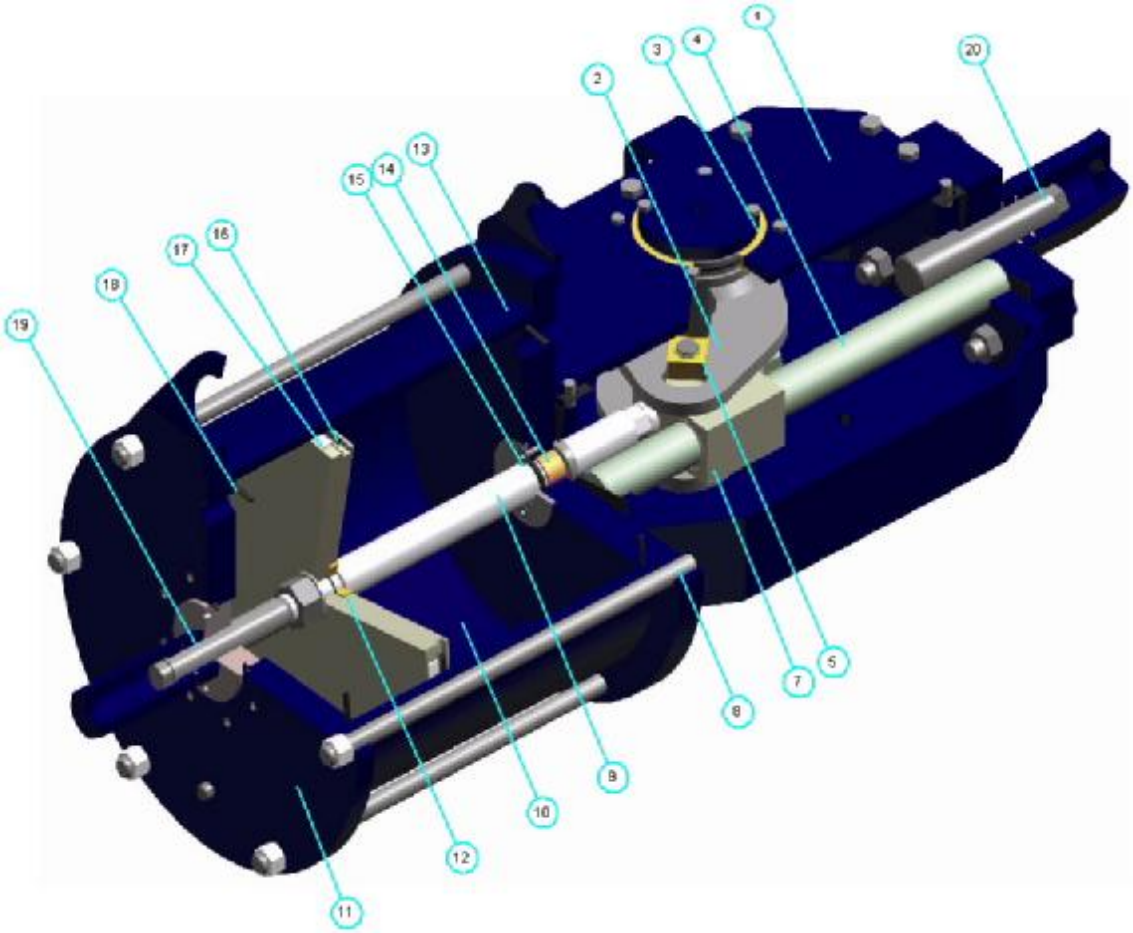

1 Centre housing	11 End flange
2 Yoke	12 O-ring
3 Yoke Bushing	13 Cylinder tube
4 Thrust bar	14 Rod bushing
5 Sliding block	15 Seal
6 Vent valve	16 O-ring
7 Guide block	17 Sliding ring
8 Tie Rod	18 O-ring
9 Piston Rod	19 Stop setting screw
10 Piston	20 Stop setting screw

start page

FASEK

homepage : www.fasek.com

email : austria@fasek.com

FASEK –PIPELINE TECHNOLOGY

SCOTCH YOKE

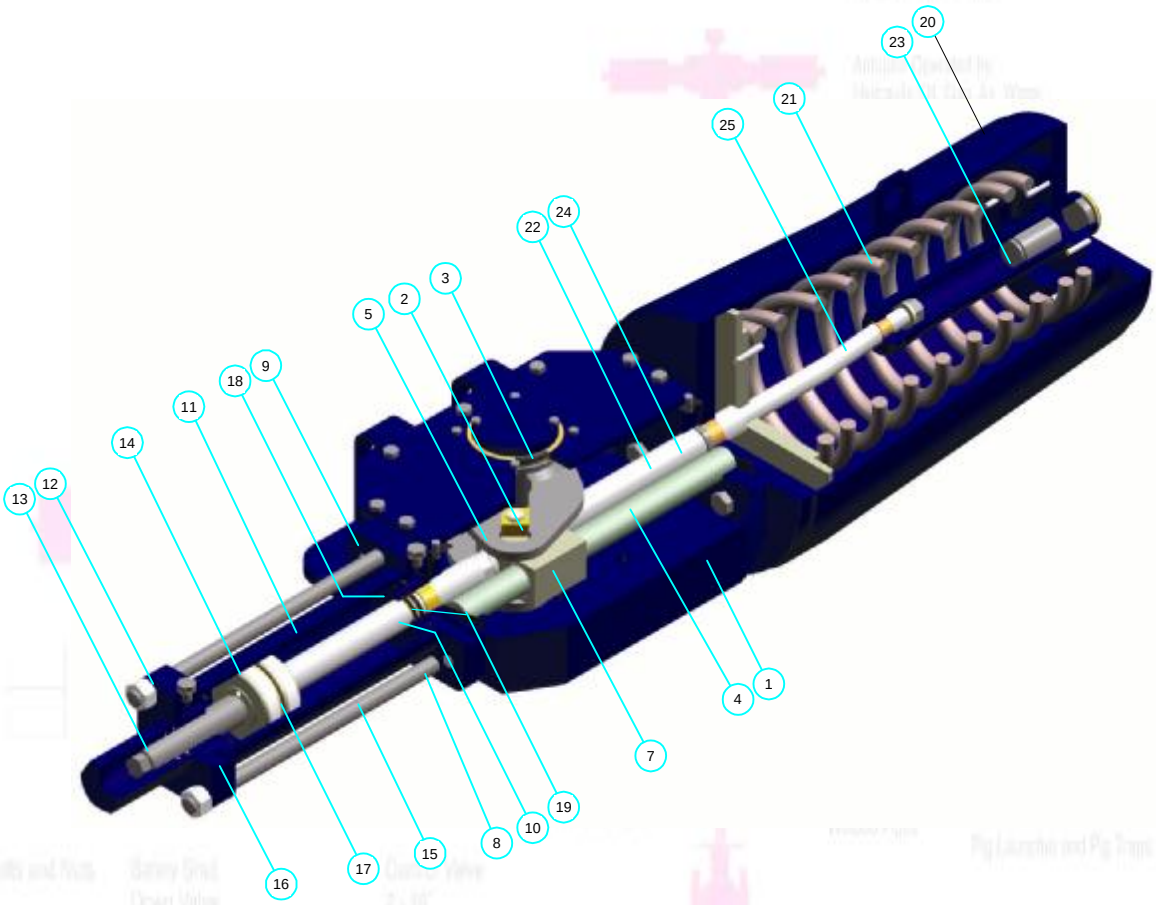

1 Centre housing
2 Yoke
3 Yoke Bushing
4 Thrust bar
5 Sliding block
6 Vent valve
7 Guide block
8 Srew
9 Head flange
10 O-ring
11 Cylinder
12 Bottom flange
13 Stop setting screw
14 Seal
15 Tie Rod
16 O-ring
17 Piston
18 Seal
19 Rod bushing
20 Spring cartridge
21 Spring
22 Spring cartridge stem
23 Stop setting screw
24 Bushing
25 Bushing

start page

FASEK

homepage : www.fasek.com

email : austria@fasek.com

FASEK –PIPELINE TECHNOLOGY

Scotch Yoke Actuators

GP/GH Range Overview

GP (pneumatic) and GH (hydraulic) Range scotch yoke actuators are designed to provide a rotary, quarter-turn movement for either on/off or modulating duty. The rugged yet compact design is available with two different yoke designs. The classic symmetrical yoke delivers peak torque at both ends of stroke. Alternatively, they can be supplied with canted torque arms designed to deliver peak torque at only one end of stroke. Use of canted arms can often reduce actuator size, weight and cost for valves with appropriate torque demand characteristics.
GP and GH Range actuators share a modular construction. The centre body is available in ten sizes producing output torque up to 600,000 Nm (5.3 million inch pounds). A pneumatic or hydraulic cylinder can be attached to either or both sides. A spring canister can also be fitted to either side.

CP Range Overview

CP Range actuators are of a versatile, modular, scotch yoke design available in four body sizes, in both double acting and spring return configurations with output torque up to 3,500 Nm (30,000 inch pounds). The compact and efficient design yields surprisingly high torques even at low pressures. The design concepts found in Rotork's large, heavy-duty actuators have been applied to the CP Range, which brings heavy-duty actuator qualities to small, quarter turn actuators.
A single piston rod supported on both sides of the yoke by PTFE impregnated bronze bushings eliminates the misalignment, friction and wear inherent in some other small actuator designs. The actuator body is of rugged cast iron. Cylinders are manufactured from carbon steel, electroless nickel-plated for corrosion resistance and low piston seal friction.

P/H Range Overview

P (pneumatic) and H (hydraulic) Range scotch yoke actuators are designed to provide a rotary, quarter-turn movement for either on/off or modulating duty. P Range actuators have operating pressures up to17 bar (250 psi). H Range actuators have operating pressures up to 210 bar (3,000 psi).
P and H Range actuators share a modular construction. The ductile iron centre body is available in two sizes producing output torque up to 5,400 Nm (48,000 inch pounds). A pneumatic or hydraulic cylinder can be attached to either or both sides. A spring canister can also be fitted to either side.

FASEK –PIPELINE TECHNOLOGY

Pneumatic Actuator

item	qty	description
2.01	1	single acting, spring return, fail close actuator
3.01	1	high pressure gas regulator
3.02	1	high pressure gas filter
3.03	1	pressure gauge
3.04	1	3/2 way solenoid valve, Eex d
3.05	1	safety relief valve
3.06		
3.07		
3.08	1	silencer
3.09		
3.10		
3.11		
3.12		
3.13		
3.14		
3.15		
3.16		
3.17		
3.18		
3.19		
3.20	1	stainless steel tubing 10x1.5
3.21		
3.22	1	stainless steel backup plate
3.23		
3.24		
3.25		

Valve action by spring return at air / electric power failure into closed position

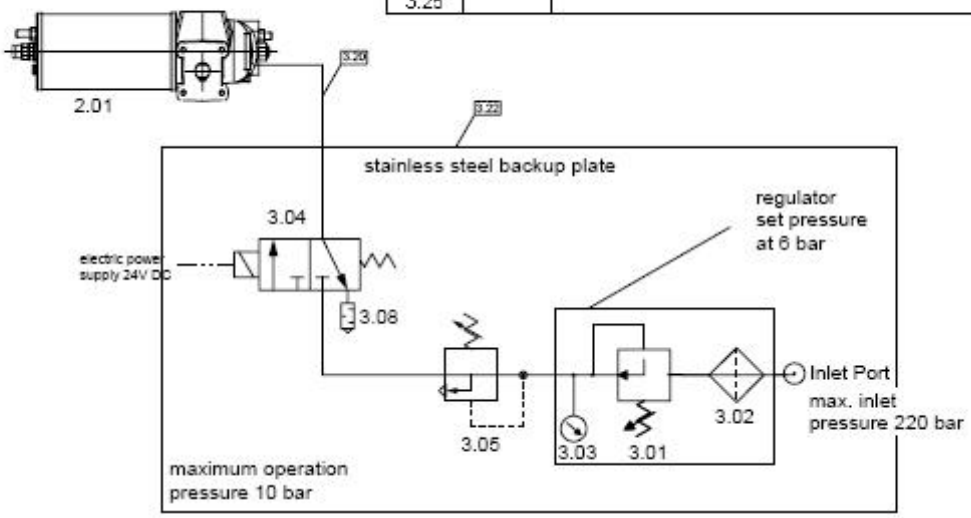

actuator & control unit suitable for low pressure instrument air or sweet dry natural gas

rev.	reason for revision	date	name
1	issued for bid	05.10.05	Bönke

	date	name
drawn	05.10.05	Bönke
check.		
approv.		

FASEK

CONTROL DIAGRAM

drawing no.: CD-Q4232

page 1

substitution for: replaced by:

start page

FASEK

homepage : www.fasek.com

email : austria@fasek.com

FASEK –PIPELINE TECHNOLOGY

Gas Actuator

item	qty	description
1	1	high pressure gas filter
2		
3	1	pressure regulator
4	1	inlet pressure gauge
5	1	outlet pressure gauge
6	2	block valve
7	1	junction box
8	2	non return valve
9		
10	2	3/2 way solenoid valve,
11	1	vent flap assembly
12	1	high pressure gas cylinder
13	1	oil reservoir
14	1	high pressure gas actuator, double acting
15	2	flow control valve
16	1	hand pump
17		
18	1	on/off remote position monitoring device
19	1	safety relief valve
20	1	4/3 way hand pump valve
21	1	hydraulic cylinder for manual over-ride

FASEK Engineering and Production GmbH

phone : + 43 2236 35291 14
fax : +43 2236 35292
mail : austria@fasek.com
homepage : www.fasek.com

L. Gattringer Str. 119
2345 Brunn am Geb.
Austria

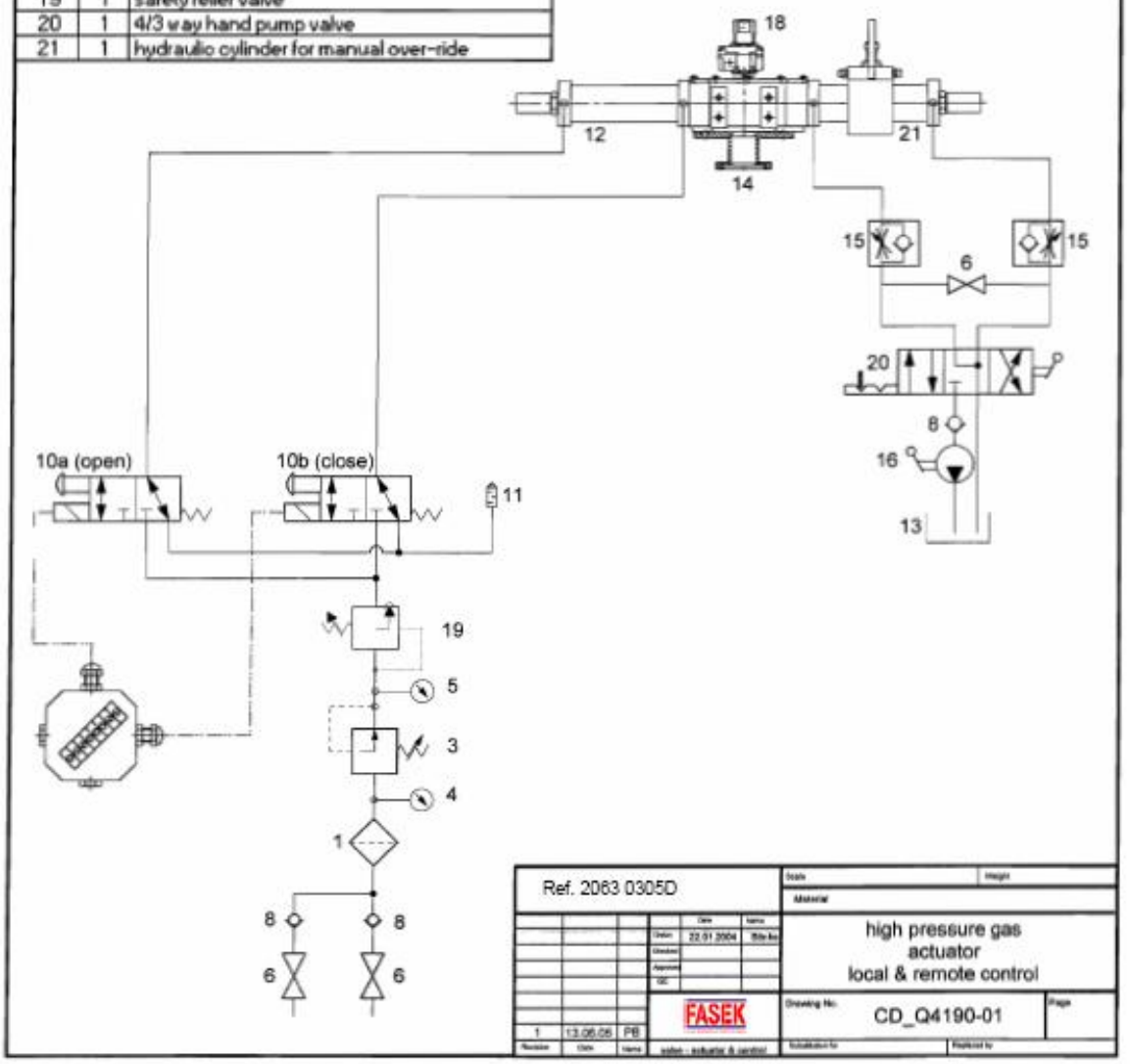

start page

FASEK

FASEK –PIPELINE TECHNOLOGY

Gas Actuator - „Fail Safe Close“

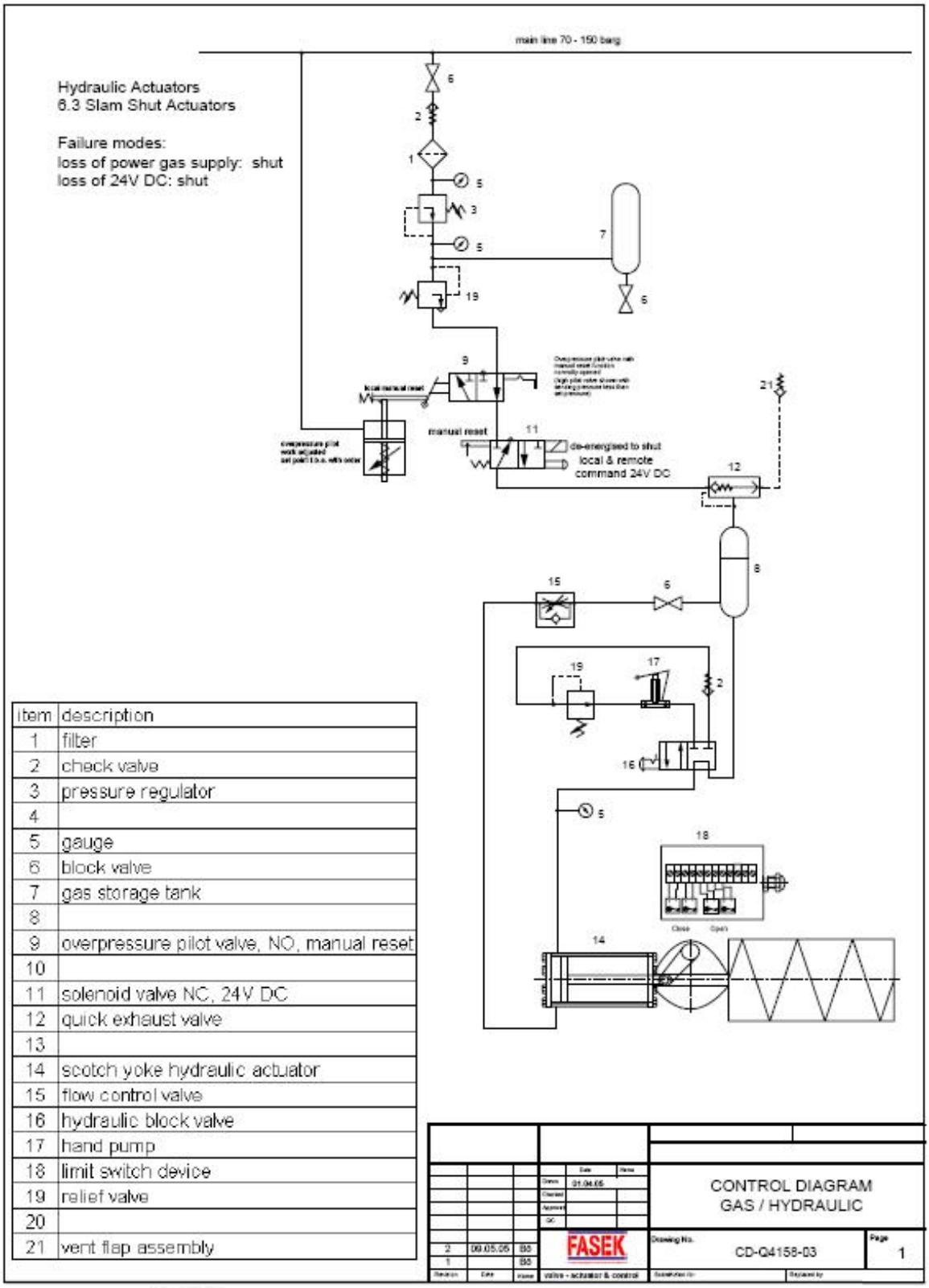

item	description
1	filter
2	check valve
3	pressure regulator
4	
5	gauge
6	block valve
7	gas storage tank
8	
9	overpressure pilot valve, NO, manual reset
10	
11	solenoid valve NC, 24V DC
12	quick exhaust valve
13	
14	scotch yoke hydraulic actuator
15	flow control valve
16	hydraulic block valve
17	hand pump
18	limit switch device
19	relief valve
20	
21	vent flap assembly

start page

FASEK

homepage : www.fasek.com

email : austria@fasek.com

FASEK –PIPELINE TECHNOLOGY

Gas Actuator Controls

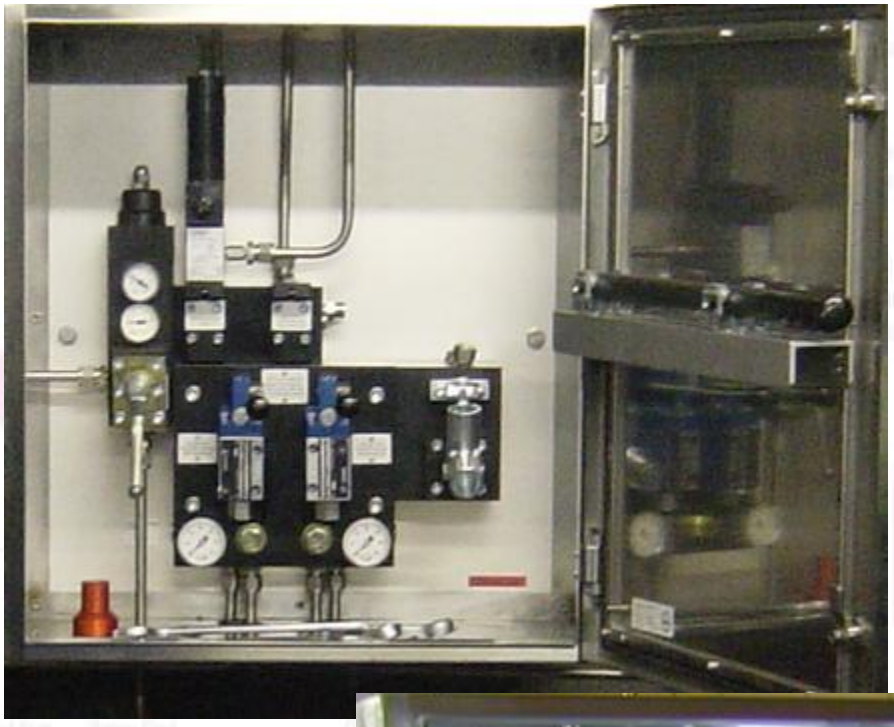

start page

FASEK

homepage : www.fasek.com

email : austria@fasek.com

FASEK –PIPELINE TECHNOLOGY

Gas Actutator with Linebreak System

item	qty	description
1	2	high pressure gas filter
2		
3	1	pressure regulator
4	1	inlet pressure gauge
5	1	outlet pressure gauge
6	4	block valve
7		
8	3	non return valve
9	1	linebreak detection system
10	2	3/2 way solenoid valve,
11	1	vent flap assembly
12	1	high pressure gas cylinder
13	1	oil reservoir
14	1	high pressure gas actuator, double acting
15	2	flow control valve
16	1	hand pump
17	1	pressure balance tank
18	1	on/off remote position monitoring device
19	1	safety relief valve
20	1	4/3 way hand pump valve
21	1	hydraulic cylinder for manual over-ride

FASEK Engineering and Production GmbH

phone : + 43 2236 35291 14
fax : +43 2236 35292
mail : austria@fasek.com
homepage : www.fasek.com

L. Gattringer Str. 119
2345 Brunn am Geb.
Austria

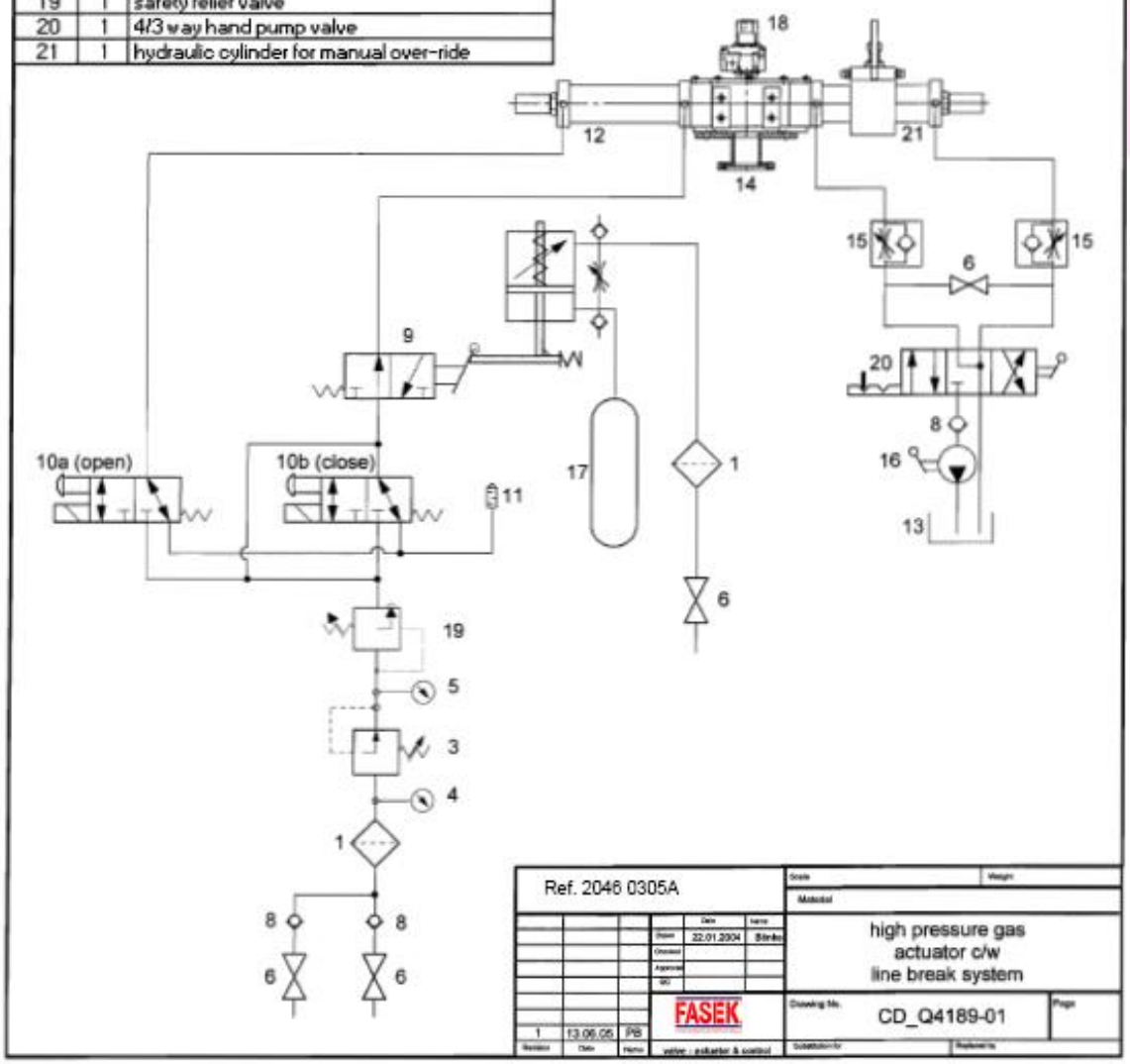

start page

FASEK

homepage : www.fasek.com

email : austria@fasek.com

FASEK –PIPELINE TECHNOLOGY

Gas over Oil Actuator

Hydraulic Actuators
6.1 Line Valve Actuators

Failure modes:
loss of power gas supply: stay put
loss of 24V DC: stay put

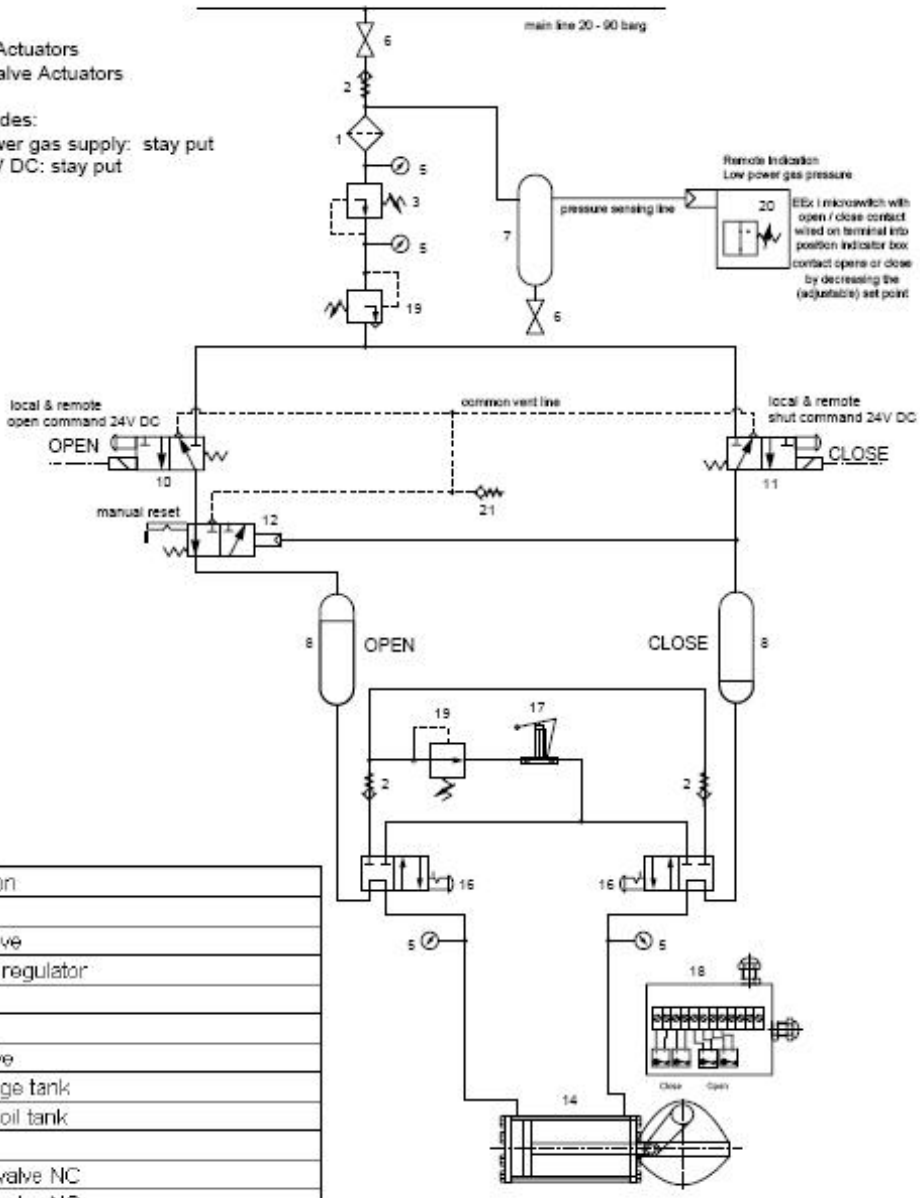

item	description
1	filter
2	check valve
3	pressure regulator
4	
5	gauge
6	block valve
7	gas storage tank
8	gas over oil tank
9	
10	solenoid valve NC
11	solenoid valve NC
12	gas pilot operated manual reset valve
13	
14	scotch yoke hydraulic actuator
15	
16	hydraulic block valve
17	hand pump
18	limit switch device
19	relief valve
20	low pressure switch
21	vent flap assembly

CONTROL DIAGRAM
GAS / HYDRAULIC

FASEK

CD-Q4158-01

Page 1

start page

FASEK

homepage : www.fasek.com

email : austria@fasek.com

FASEK –PIPELINE TECHNOLOGY

Gas over Oil Actuator

start page

FASEK

homepage : www.fasek.com

email : austria@fasek.com

FASEK –PIPELINE TECHNOLOGY

Electro Hydraulic Actuator

FEHA - **F**ASEK **E**LEKTRIC **H**YDRAULIC **A**CTUATOR

Description:

CONTROL UNIT

- **control housing** stainless steel IP 65 at least
- **electric control system** EEX de IIB T4 ATEX with local control switch and remote connection
- two **3/2 way solenoid valves** with hand operated lever 24 VDC (other voltages on request)
- **motor pump 24 VDC** (other voltages on request possible)
- **hydraulic hand pump** for emergency operation in case of power failure or pressure drop
- **contacting instrument**
- **safety valve**
- **oil filter**
- **oil tank** stainless steel
- **hydraulic accumulator** (bladder type) for one powerless stroke at least
- **piping and fittings** (SWAGELOK or equivalent types) made of stainless steel

FUNCTION

- local/remote operation selectable by key operated switch

local operation:

- electrical control by turning selector-switch for “OPEN” and “CLOSE”
- mechanical operation by pressing hand operated lever
- emergency operation by hand pump and hand operated lever
- local indication by pressure gauge and electrical power by green signal lamp

remote operation:

“OPEN” and “CLOSE” by electrical signal

Signals:

All signals are realized by potential free change-over contacts

- **open** (actuator reached open position)
- **close** (actuator reached close position)
- **local** (the local/remote key operated switch is in local position)
- **remote** (the local/remote key operated switch is in remote position)
- **pressure alarm** (hydraulic pressure is below the minimal allowed limit)
- **voltage alarm** (fuse or voltage failure)
- **oil level alarm** (oil level is below the minimal level – the motor pump will stop by oil level alarm)

start page

FASEK

homepage : www.fasek.com email : austria@fasek.com

FASEK –PIPELINE TECHNOLOGY

Electro Hydraulic Actuator

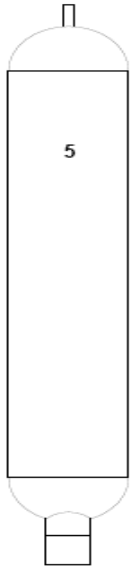

mounting position of hydraulic accumulator against with actuator size

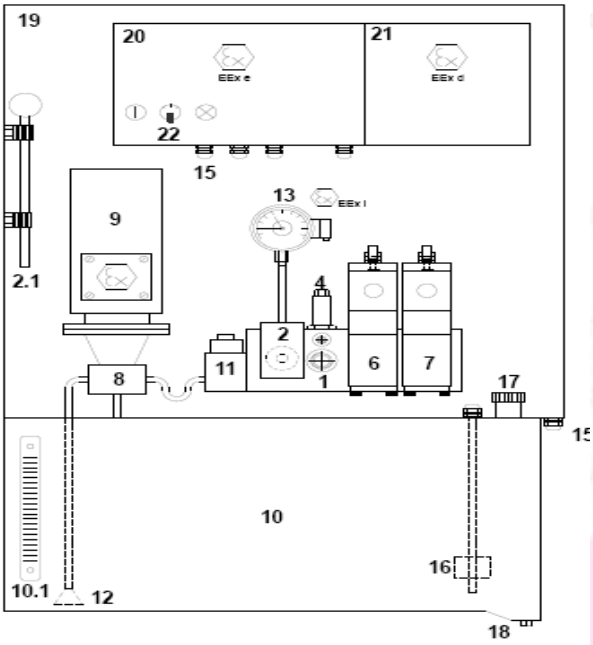

1) modular block
2) hand pump
2.1) hand pump lever
3)
4) safety valve
5) hydraulic accumulator (bladder type)
6) solenoid valve with emergency hand operated lever (CLOSE)
7) solenoid valve with emergency hand operated lever (ZU)
8) hydraulic pump
9) electric motor standard 400 VDC 3~(alternatively 24 VDC or 230 VAC)
10) hydraulic tank
10.1) oil level indicator
11.) fine filter (high pressure)
12) rough filter
13) contacting instrument
14) --
15) cable glands
16) floater switch
17) filling neck
18) drain plug
19) stainless steel housing/tank combination IP 65 at least
20) electric housing/terminal box EEXe
21) electric housing/relay amplifier fuse etc. Eex d
22) local operating switches

start page

FASEK

homepage : www.fasek.com email : austria@fasek.com

FASEK –PIPELINE TECHNOLOGY

Electro Hydraulic Actuator

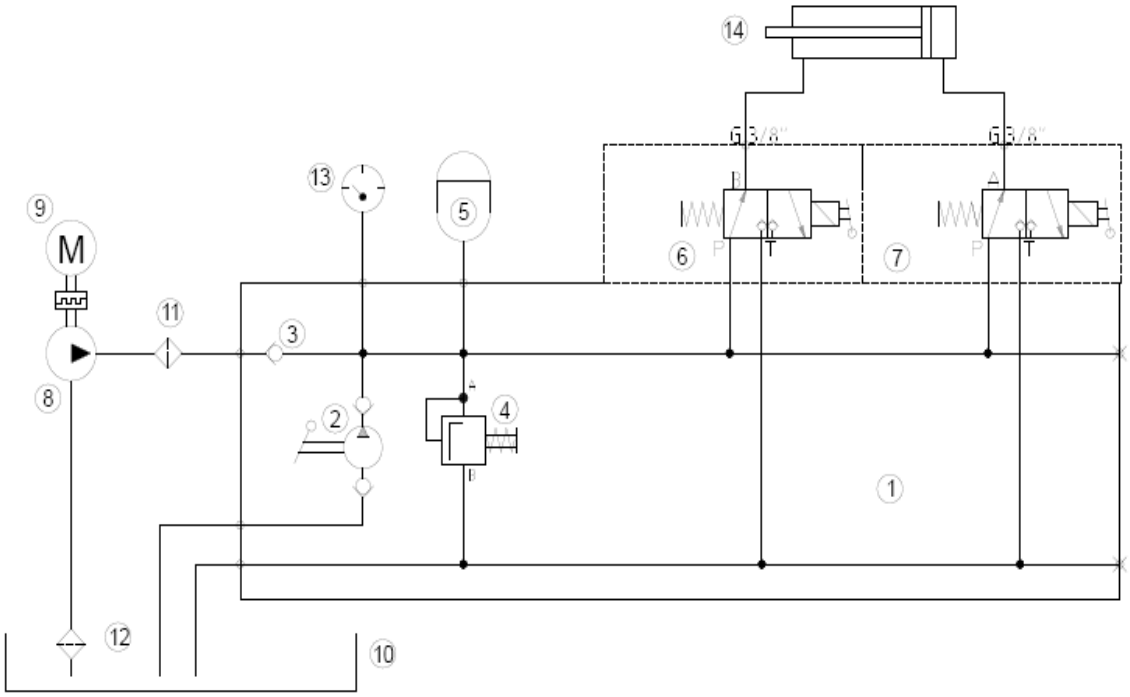

1) modular block
2) hand pump
3) check valve
4) safety valve
5) hydraulic accumulator (bladder type)
6) solenoid (close)
7) solenoid (OPEN)
8) hydraulic pump
9) electric motor standard 400 VDC 3~(alternatively 24 VDC or 230 VAC)
10) hydraulic oil tank with level indicator
11) fine filter (high pressure)
12) rough filter
13) contacting instrument
14) cylinder of actuator

start page

FASEK

homepage : www.fasek.com

email : austria@fasek.com

FASEK –PIPELINE TECHNOLOGY

Electro Hydraulic Actuator

Bock technic for easy maintenance and leakage free connection of the control elements.

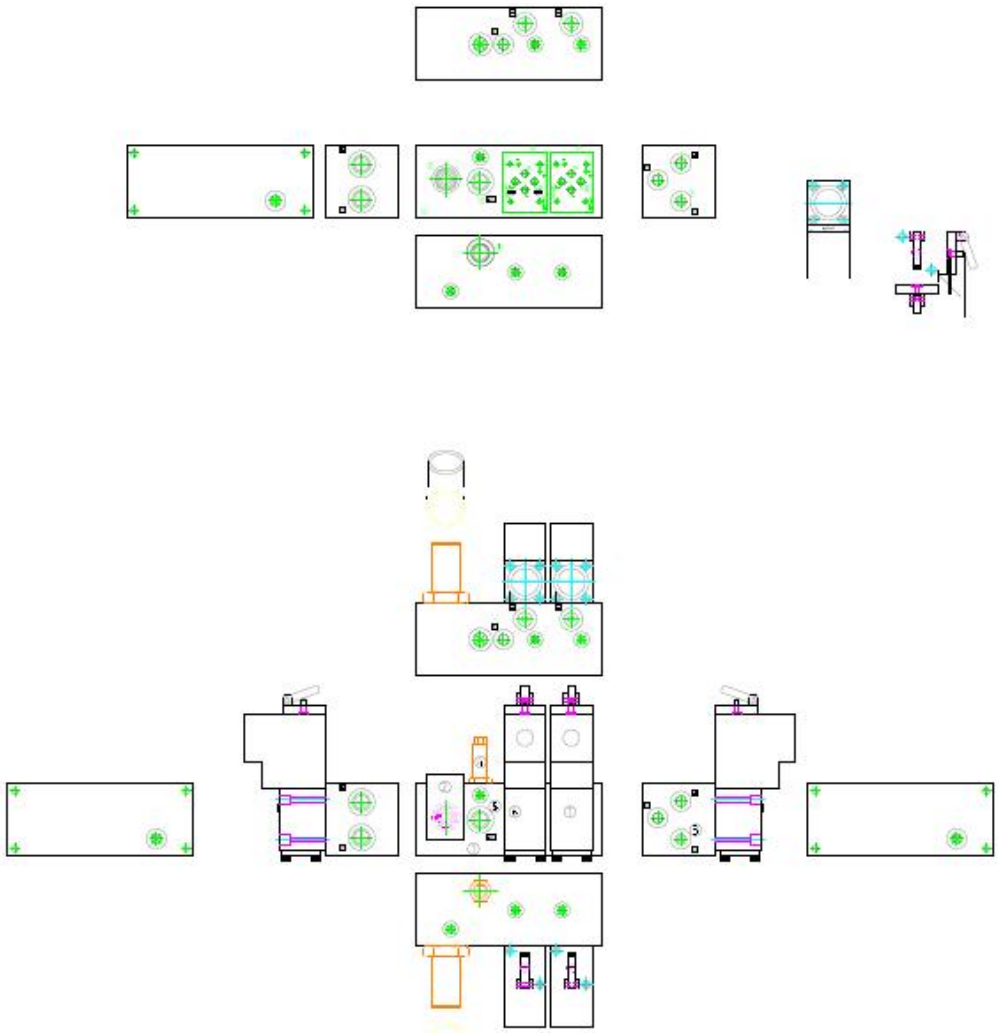

start page

FASEK

homepage : www.fasek.com

email : austria@fasek.com

FASEK –PIPELINE TECHNOLOGY

Electro Hydraulic Actuator

Direct Current Motor

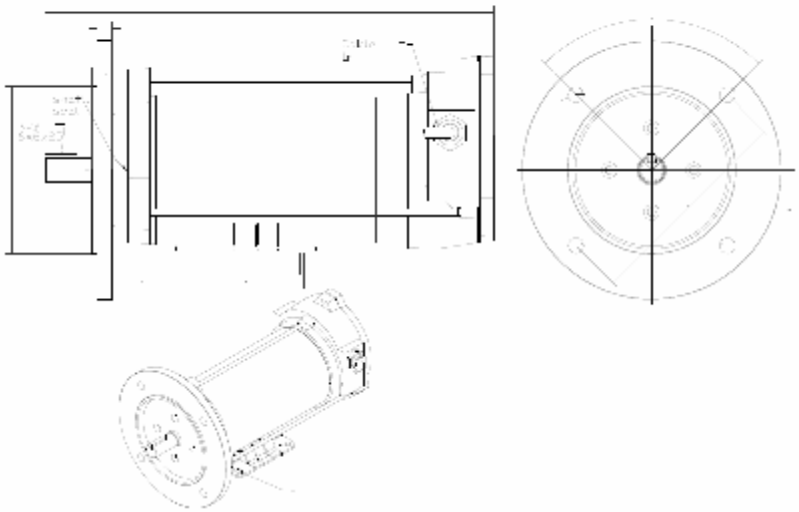

Explosion-proof motors for use in potentially explosive atmospheres
Custom-made flameproof "EExd" electric motors for use in potentially explosive atmospheres, such as fuel dispensing pumps, vapour recovery pumps, paint stirrers, ventilation, offshore... - wherever an explosion risk is present due to gases or dust.
General design: EExd II B T6 to T3.
Some motortypes are now available with IIC certification.

Three-phase motors, single-phase motors with permanent and/or start capacitors. Permanent magnet DC motors and DC motors with field coil.
High starting and high maximum torque: the motor will drive any type of pump, even in low-voltage conditions.
Continuous or intermittent duty.
Built-in thermal protector, automatic or manual reset.
Optional built-in power relay.
Oil-resistant cable and flame-proof gland for easy connection.

Power range: from 40 W up to 2.2 kW and from 2-pole to 16-pole speed in single and three phase. DC motors up to 1000 W, 12 V to 180 V DC.

All motors are built following strict quality procedures and are in accordance with Safety Requirements EN 50014 and EN 50018. All motors are certified to European ATEX

start page

FASEK

homepage : www.fasek.com email : austria@fasek.com

Electro Hydraulic Actuator

ELNOR MOTORS

CE MACHINERY SAFETY DIRECTIVE

MANUFACTURERS STATEMENT

We, ELNOR MOTORS nv
De Costerstraat 45,
B-3150 Haacht (Wespelaar), BELGIUM

declare on our own responsibility that the product:

Asynchronous explosionproof motors single and three-phase
and direct current (DC) motors
of 20 upto 3000 W

complies with:

the standards:
- EN 60204-1 Safety of machines - Electrical equipment of machines: Part 1 : General requirements.
- EN 60034-1 - HD 53.1 Electrical rotating machines.
- EN 50018 Electrical apparatus for potentially explosive atmospheres – Flameproof enclosures "d".
- EN 50281 Electrical apparatus for use in the presence of combustible dust.

the directives:
- "ATEX" directive 94/9/CE
- "Low voltage" directive 73/23/CE, modified by the directive 93/68/CE.
- "Electro magnetic compatibility" directive (EMC) 89/336/CE, modified by the directive 92/31/CE and 93/68/CE.

FASEK –PIPELINE TECHNOLOGY

FASEK ELECTRONIC LINE BREAK SYSTEM

To protect the

start page

FASEK

homepage : www.fasek.com

email : austria@fasek.com

FASEK –PIPELINE TECHNOLOGY

Electronic Line Break Control System

PDC
PRESSURE DETECTION CONTROLLER

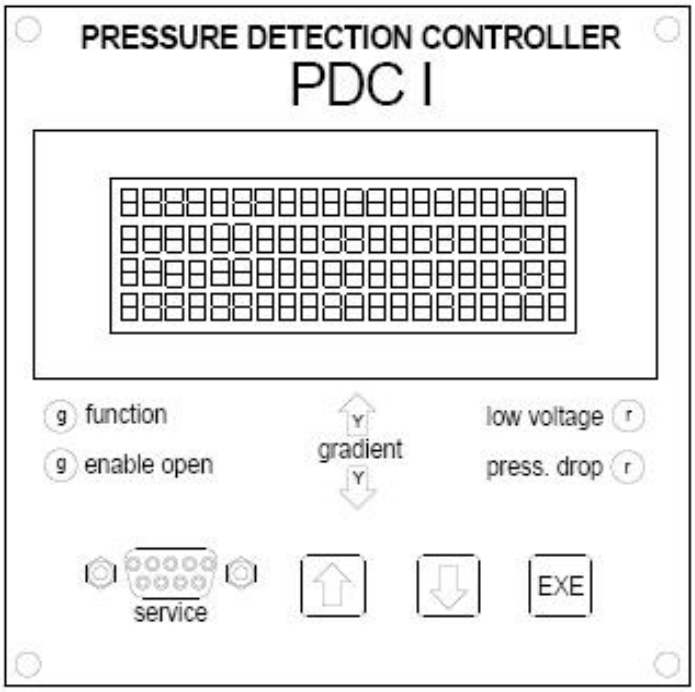

terminals

power supply	1	voltage 22 - 27 VDC+
	2	voltage 22 - 27 VDC-
**	3	activate valve close
	4	activate valve close
	5	activate valve close
*	6	signal enable valve open
	7	signal enable valve open
	8	signal enable valve open
*	9	signal voltage warning
	10	signal voltage warning
	11	signal voltage warning
*	12	signal voltage alarm
	13	signal voltage alarm
	14	signal voltage alarm
*	15	signal pressure drop alarm
	16	signal pressure drop alarm
	17	signal pressure drop alarm
*	18	signal Watchdog
	19	signal Watchdog
	20	signal Watchdog
transmitter	21	pressure transmitter +
	22	pressure transmitter -
measuring 4 - 20mA	23	analog pressure out +
	24	analog pressure out -
	25	pushbutton up
	26	pushbutton down
	27	pushbutton exe
	28	ground

* contact DC 8A
** contact DC 5A
*** remove balance when measuring

FASEK	Scale 1 : 1	Size A4	Weight
	Material	
	Title: PDC Pressure Detection Controller (operating unit)	
	Date	Name
drawn	Sep. 15. 2005	
checked		
Rev. 1		
	Drawing No. GD-PDC-01	Page 1 of 1
	Project no.	

start page

FASEK

homepage : www.fasek.com

email : austria@fasek.com

FASEK –PIPELINE TECHNOLOGY

Electronic Line Break Control System

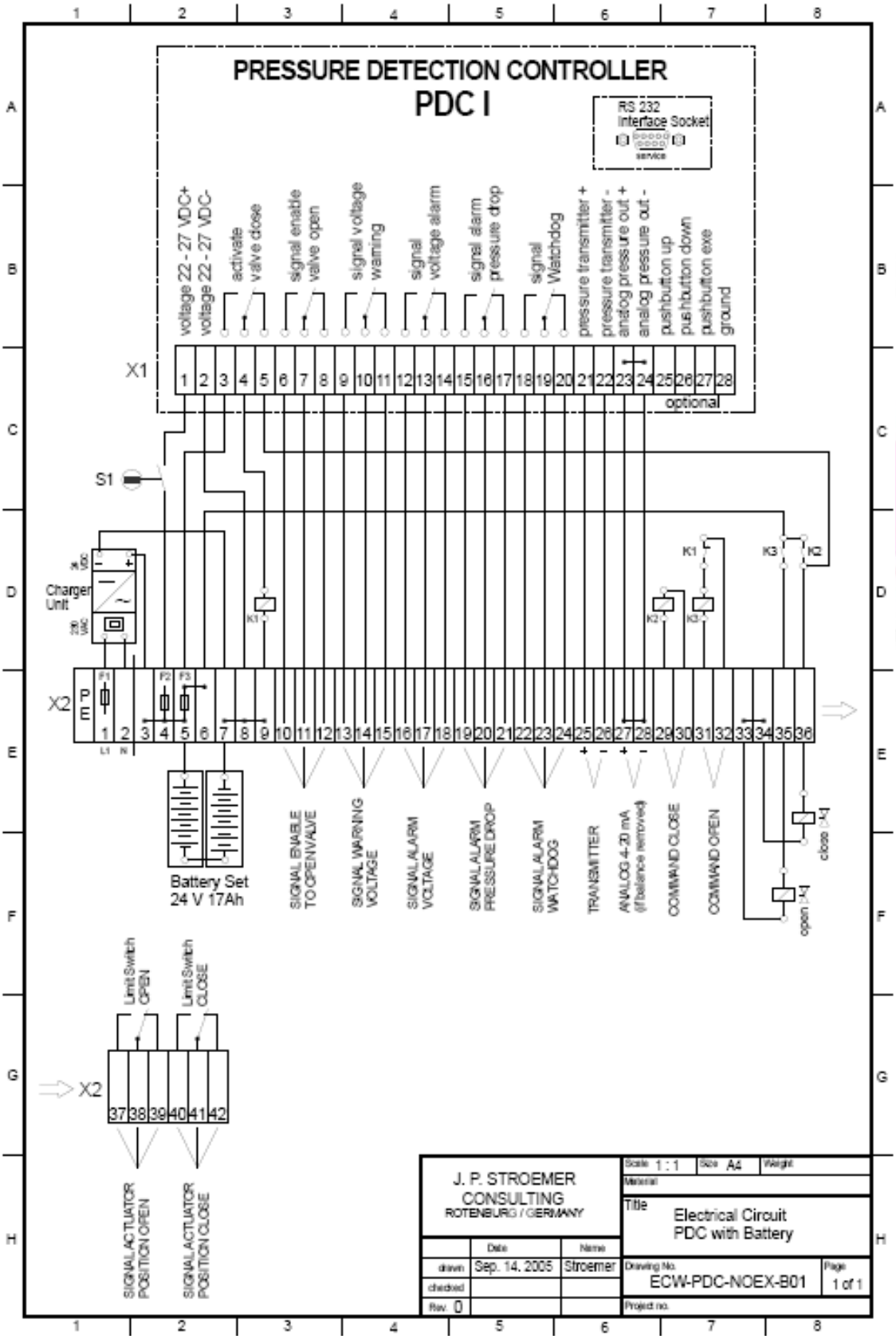

start page

FASEK

homepage : www.fasek.com

email : austria@fasek.com

FASEK –PIPELINE TECHNOLOGY

Electronic Line Break Control System

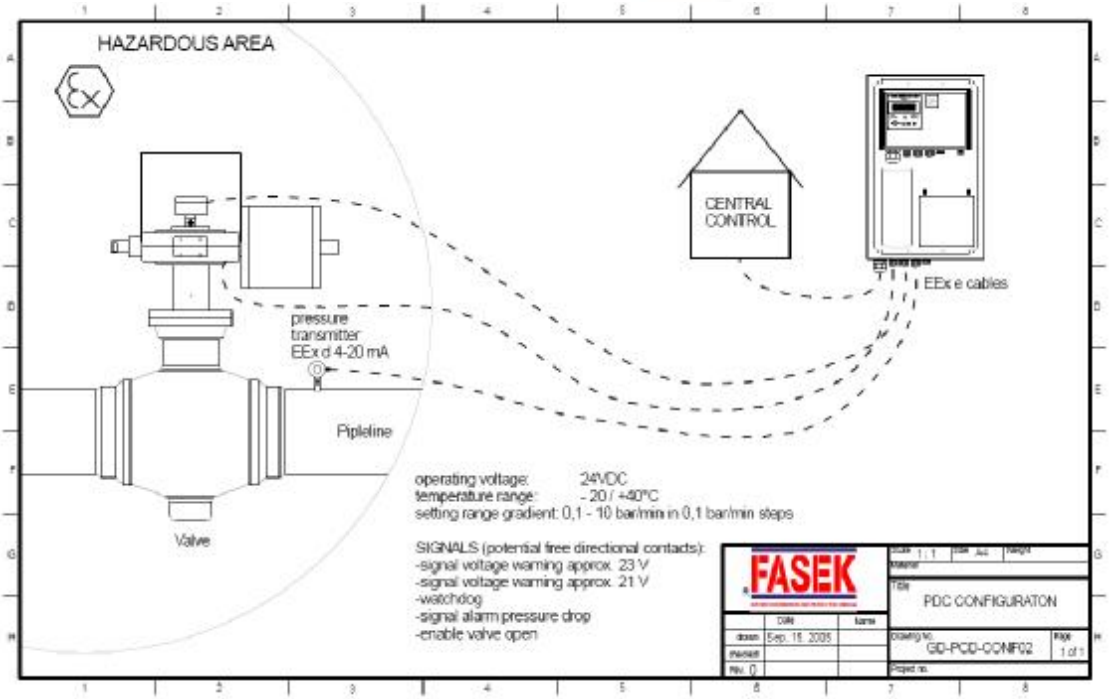

start page

FASEK

homepage : www.fasek.com

email : austria@fasek.com

FASEK –PIPELINE TECHNOLOGY

Electronic Line Break Control System

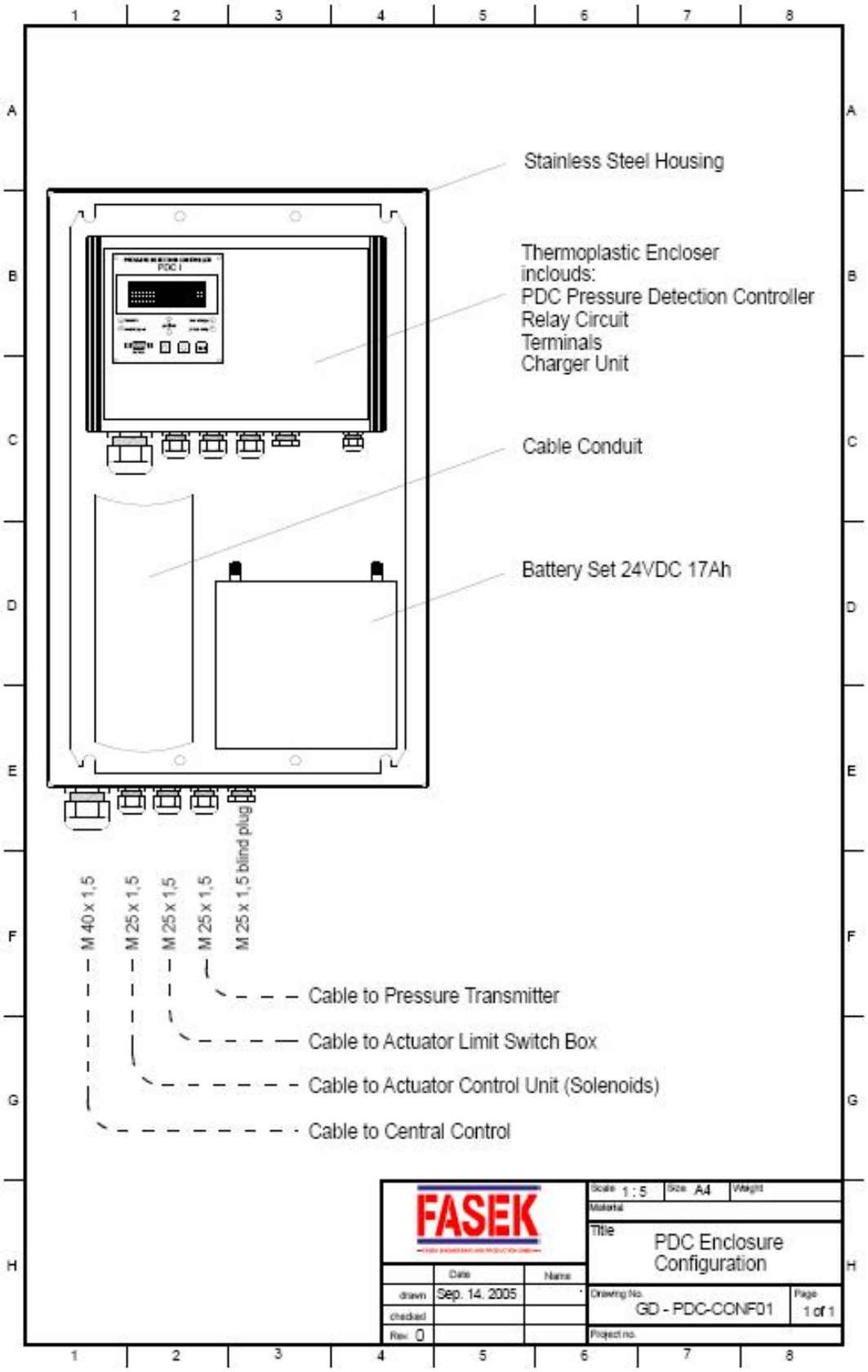

start page

FASEK

homepage : www.fasek.com

email : austria@fasek.com

FASEK –PIPELINE TECHNOLOGY

PDC – 1 (Pressure Detection Controller)

The **Pressure Detection Controller** type **PDC-1** is an electronic equipment,
developed by **FASEK Engineering and Production GmbH**,
for monitoring the pipeline integrity.
The PDC-1 continuously monitors the pressure of the pipeline, vessels or other pressurized applications in case of failure. For Example, if a failure in
the pipeline happens the PDC-1 sends a command to the actuator of the line valve and stroke it to the fail safe position.
The electrical power necessary for working, is supplied by a 24V battery pack and a charger unit that allows the PDC-1 to work autarkic if the power supply of the local net is failed.

The PDC-1 is provided with a local operator output device, made of four signalisation lamps and one 4 lines / 20 characters LCD display and input device made of 3 stainless steel push-buttons on the front panel.
The local operator in/out device allows to enter the configuration data and to visualise the values of variables or the status of the device.

Additional RS232 serial communication port is provided for connection to a PC or Laptop, to carry out parameter configuration, or variables visualisation or to down-load the recorded event data for further analysis of pipeline behaviour. The communication between PDC-1 and the PC/Laptop is done via RS232 digital serial link.
The optional program PDCrecord.exe, runs under WINDOWS 95/98/2000/XP operating system and is to be installed on the PC/Laptop.

The program PDCrecord.exe allows the following items:

- visualise the data memory content
- present pressure value
- date/time
- voltage of power supply
- set points and all internal parameters
- to configure the set-points and the internal parameters
- setup the firmware (only by FASEK Engineering and Production GmbH technician)

The PDC 1 was especially engineered for “ON FIELD” service, it means capability of working in the severest ambient conditions, as wide operating temperature range, vibrations, explosive atmosphere (by optional special enclosures), etc.

start page

FASEK

homepage : www.fasek.com email : austria@fasek.com

FASEK –PIPELINE TECHNOLOGY

WORKING PRINCIPLE

The PDC-1 measure by the pressure transmitter the actual pipeline or vessel pressure and convert the values to compare the settings of the pressure gradient. Additional the PDC-1 memorises the sampled values in a temporary rolling memory.

GENERAL CHARACTERISTICS

Valve control on pressure gradient

When the pressure gradient exceeds the ***gradient set-point***, the PDC-1 sends an electric
command to the solenoid valve of the actuator and strokes the line valve to the fail position.
A software ***peak suppression filter*** is provided. The settings of the ***peak suppression filter*** is suitable for several operating methods of the pipeline or vessel systems.

Valve control on high or low pressure

The PDC-1 sends an electrical signal to the solenoid valve in order to stroke the line valve to the fail safe position when the pressure value is lower than the ***low pressure set-point*** , or is higher than the ***high pressure set-point***.

Solenoid valve control output

The PDC-1 is provided with a one change-over dry contacts of a relay, suitable to control the solenoid valve of the actuator.
A software timer allows to set the duration of the solenoid valve control.
A software time delay allows to set the time delay of the solenoid valve.

Power supply

Line Power: the PDC-1 accepts external power at 24 VDC coming from local net or solar panel if the voltage is coming from uninterruptible power supply (UPS). The voltage of 230VAC is required by using a Battery pack with charger unit.

Battery pack: the PDC-1 is fitted with a battery pack with 2 x 12V 16Ah. The battery pack provides electrical power to the PDC-1 when the 230VAC Line Power to the charger unit fails or is not present. An adjustable power supply voltage warning signal and a power supply voltage alarm signal is provided if the voltage of the battery drops.

FASEK –PIPELINE TECHNOLOGY

local operator I/O device

The PDC-1 is fitted with a 4 lines / 20 characters LCD display and 3 stainless steel push-buttons that allows to enter the configuration parameters or to visualise the working data.

Two push-buttons "⇑up", "⇓down" are used to move into the menu, while the third 'EXE' is used to enter the selected information.

The visualised messages of the display are generally in English language. Other languages are possible if ordered the PDC-1 in the required language. Later change the language is possible by update the firmware of the PDC-1.

Additional four signalisation lamps indicate the actual status of the PDC-1:

Function (green): the power supply is connected and the PDC-1 is switched on

enable open (green), **low voltage** (yellow), **pressure drop** (red): (see: signal table)

The following operations can be done by the local operator I/O device

to show and configure:

-pipeline present pressure value

-battery voltage value

-status and alarm of the PDC-1

-to configure all PDC-1 parameters and set-points

-to arm the valve control output relay

The configuration operation are protected by a **password**. The operator can enter in the configuration menu and change the parameters or arm the solenoid valve control output, only after entering the accordant password . The PDC-1 is supplied by FASEK Engineering and Production GmbH with the default password **"1111".** The customer can enter its own secret password of four numerical characters. When the new password is entered, the default one is no longer valid.

Output relays

Six output relays with change-over, dry contacts are provided for remote signalling of **alarm, warning or status** of PDC-1.

In **warning** all functions of the PDC-1 are available but the reason of the alarm must researched.

(see: signal table)

FASEK –PIPELINE TECHNOLOGY

Pressure transmitter

The pressure transmitter (two wire) is supplied with the PDC-1 and is installed on the line valve according to FASEK Engineering and Production GmbH instructions. The pressure transmitter must be installed downstream the line valve and converts the pipeline pressure to 4-20 mA SMART pressure transmitter with digital HART communication protocol.

SIGNAL TABLE

ENABLE VALVE OPEN

(The PDC-1 is in operating mode and the normal operating of the valve is enabled.)

VOLTAGE WARNING

(The voltage of the power supply of the PDC-1 is low. The normal function of the PDC-1 is available but the power supply and the battery system must be researched.)

VOLTAGE ALARM

(The power supply of the PDC-1 is too low and the normal function is unsafe)

WATCHDOG

(The PDC-1 is not working)

PRESSURE DROP ALARM

(The pressure of the pipeline or vessel system exceeds the allowed “pressure drop/min” limits of the PDC-1 settings.)

PRESSURE ALARM

(The pressure of the pipeline or vessel system exceeds the allowed “high/low pressure” limits of the PDC-1 settings.)

The “ACTIVATE VALVE CLOSE” output relay with change-over, dry contacts is provided for control the solenoid valve of the actuator.

TECHNICAL CHARACTERISTICS OF PDC-1

Application medium: gas / liquids

Ambient temperature: -20° C / + 60° C

Working pressure: from 0 to 300 bar

Pressure drop rate: from 0.1 to 10 bar / min

Valve stroke delay: from 0 to 999 sec.

Valve stroke duration: from 0 to 999 sec.

High/low pressure set-points from 0 to 300 bar.

Line power: 24 Vdc 610%

Solenoid valve control output: change-over, dry contacts

Service PC connection: via RS 232 serial port.

FASEK –PIPELINE TECHNOLOGY

Pneumatic Line Break Control System

Adjustance range:
0,5 - 2,5 bar/min.
other rates on request

Medium:
air, gas

Temperature range:
-25 - +70°C
(lower temperatures on request)

TECHNICAL DATA:

Mounted in stainless steel control box together with solenoid valves and filter regulators in modular block technology.

start page

FASEK

homepage : www.fasek.com

email : austria@fasek.com

FASEK –PIPELINE TECHNOLOGY

PNEUMATIC LINE BREAK SYSTEM

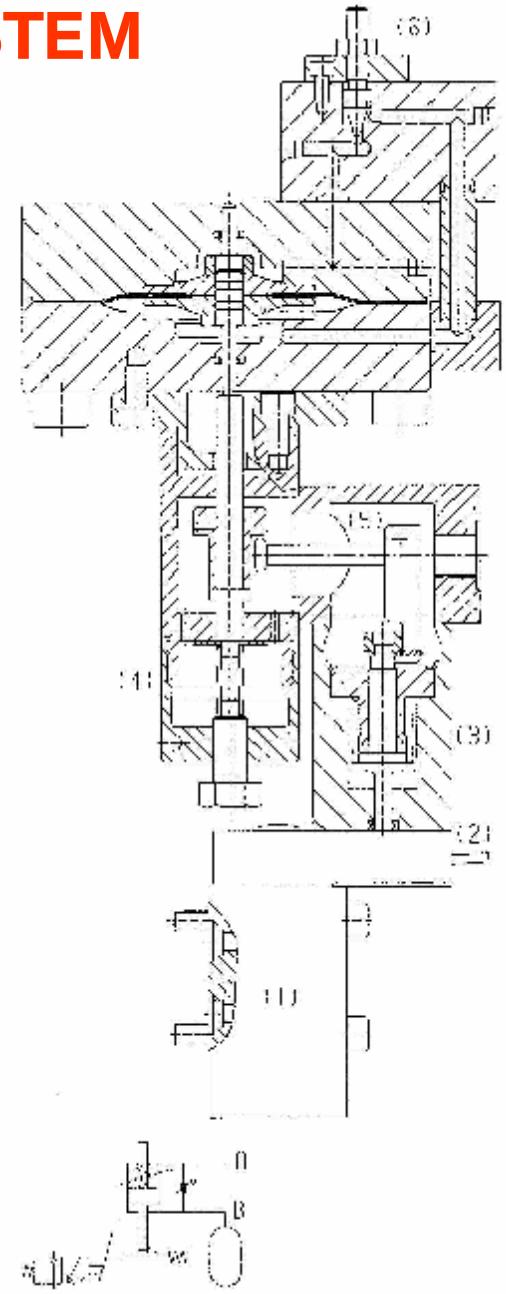

(1) switching valve

(2) hand lever

(3) spring loaded actuator pin

(4) control spring

(5) retaining pawl

(6) restrictor valve

start page

FASEK

homepage : www.fasek.com

email : austria@fasek.com

FASEK –PIPELINE TECHNOLOGY

Pneumatic Line Break Control System

Differential – pressure – valve for line break – systems

Die differential – pressure – valve is a **leakage free**, **block type poppet** valve for use in **line break-systems**.

pressure range (1):	0 to 700 bar
max. differential pressure (A-B):	156 bar (ANSI 900)
switching differential pressure:	100to 500 mbar
size:	3mm (1/8”) / 6mm (1/4”)
temperature range:	-25 (-60) to 60°C

Function and characteristics:

In line break-systems port (B) is connected to a pressure vessel which functions together with the restriction valve (6) as a pneumatic timer. Normally the switching diaphragm piston is equalised since the pressure of the vessel follows the pressure of the flow line. In case of a line break the pressure in the flow line drops faster than the pressure in the vessel causing a dynamic differential pressure which acts on the piston.

If the differential pressure exceeds the set point the diaphragm-piston is pushed towards the control spring (4) causing the retaining pawl (5) to release the spring loaded actuator pin (3), which suddenly acts on the lever (2) of the valve (1), forcing the valve to switch into the locked position. The valve may only be unlocked manually at site.

The differential pressure is a function of the volume of the vessel and of the orifice of the restrictor valve.

The lever (2) allows to operate the valve manually.

The differential-pressure valve will be adjusted and locked in the factory to the required set point.

The housing of the valve as well as all parts inside are made of **non corrosive materials** (AISI 316, stainless steel, ceramic balls).

The valve (1) may be a **normally open** or a **normally closed** 3way / 2position or a 2way / 2position valve which allows to realise all functions required in hydraulic or pneumatic **safety-control-units**.

The valve is qualified for use in sour gas installations
NACE MR 01-75

start page

FASEK

homepage : www.fasek.com email : austria@fasek.com

FASEK –PIPELINE TECHNOLOGY

FASEK SOLAR POWERED ACTUATORS

Automatisation is one of the main tasks for gas and oil companies to fulfil the European regulations for health and safety.

In some areas there is still no power supply along the pipelines or it is forbidden to build (install) an electric power supply line because of nature protection in a certain area.

To protect the environment and follow their obligations, customers install more and more solar powered actuator systems. Because of the fact that our electro hydraulic actuator can also work with 24 V power can be supplied by battery packages without any problem. Also remote control via GSM can be done with electricity from the batteries.

All the electrical equipment is energy optimised to keep the consumption as low as possible and reduce the size of the solar panel unit to a minimum.

start page

FASEK –PIPELINE TECHNOLOGY

Solar Systems with FEHA Actuator

Solar Unit

For an actuator of this size and local conditions mentioned in your mail we will need a solar unit of 480 Watt (3 double panels each 80 W) and a battery unit of 200 Ah. This is based on an actuator with two positive solenoid valves (actuator fail safe in position).

For actuators with “fail safe position open or close” the consumption will be higher because of the permanent consumption of 8 Watt on the solenoid. For this application we will need a solar unit with approx. 1000 Watt and a battery package of 400 Ah.

Solar Paneel P 80

Standard test conditions 1000W/m², cell temperature 25°C

- rated power P max - 80 W
- minimal Power – 75 W
- efficiency 12,7 %
- voltage max 16,9 V
- rated current 4,76 A
- tolerance ± 5%´
- cells per paneel 36 (each 125x125 mm²)
- aluminium frame
- size paneel : 1200x540x36 mm (lxwxh)
- weight : 7,5 kg
- 20 years guarantee on electrical output

10 years 90 % of minimal output
20 years 80 % of minimal output

start page

FASEK

homepage : www.fasek.com email : austria@fasek.com

FASEK –PIPELINE TECHNOLOGY

Solar Systems with FEHA Actuator

Solar controller

Description

The Steca Solarix 2401 and 4401 controllers complete the product ra nge of the Solarix Omega 30 Amps controller to 40 Amps solar current, available in 12 V, 24 V and 48 V. The load current is limited to 10 Amps. The charging procedures are based on voltage levels which can be individually adjusted by four buttons behind the front cover.

Features

- voltage regulation
- PWM shunt battery charging
- boost charging
- equalising charge
- float charging
- automatic load reconnection
- automatic selection of voltage for 12 V / 24 V
- temperature compensation
- positive grounding
- (or) negative grounding on one terminal
- field adjustable parameters by four buttons
- RJ45 interface

start page

FASEK –PIPELINE TECHNOLOGY

Solar Systems with FEHA Actuator

Batteries :

Technology	Carbon-fiber deep cycle monobloc
Maintenance	Free
Configuration	12 Volt (2 x 12 =24 V)
Capacity C20*	230 Ah
Capacity C5*	200 Ah
Dimensions L x W x H mm (approx.)	513 x 270 x 242
Filled Weight	62,2 kg
Guarantee	3 year factory guarantee

The stated capacity is an average value and may differ in actual use. C20-method is battery discharge at 50% of capacity for 20 hours. C5-method is battery discharge at 20% of capacity for 5 hours to a final voltage of 10.5 Volts.

Deep discharge - Cyclic operation - Long-life

The battery can be discharged at least 750 times to a final voltage of 10.8 Volts. This is unique for flat-plate batteries that use the lead-sulphur concept. By using hollow carbon-fibers, life expectancy is two to three times that of conventional batteries.

Description

All the electrical equipment including batteries, charger unit, ventilators and cable connections will be mounted in cabinets. Cabinets are available in different sizes depending on the quantities of batteries to be installed.

FASEK –PIPELINE TECHNOLOGY

Solar Systems with FEHA Actuator

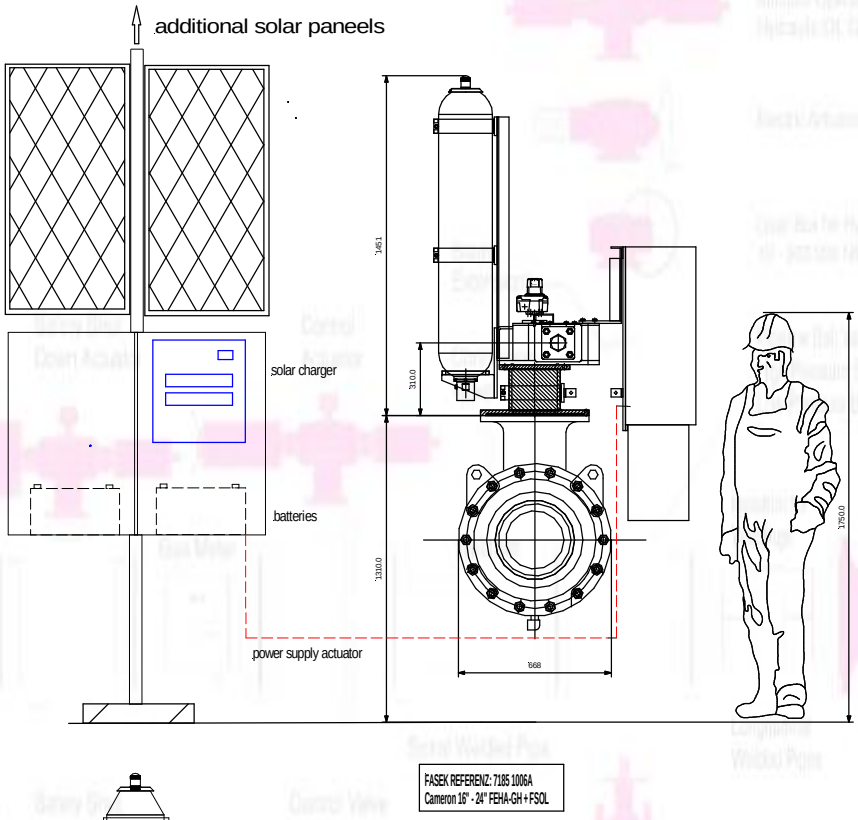

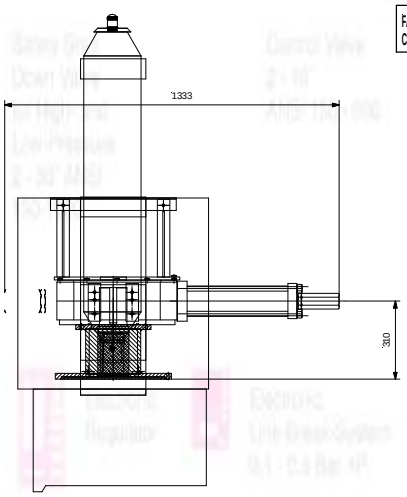

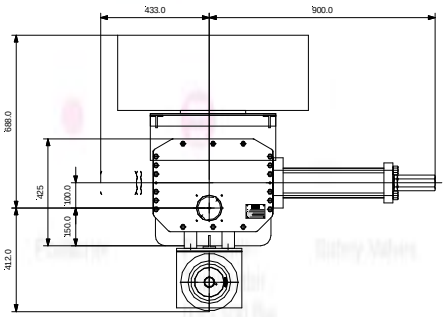

- Compact unit with battery packages depending on the local situation.
- Remote Control with mobile phone control on request.
- To built as stand alone unit or with any kind of power supply, even unstable supply.
- Valve size not limited and actuators available for quarter turn or linear actuated valves.
- Solar controler and batteries have to be built outside the EX zone

start page

FASEK

homepage : www.fasek.com

email : austria@fasek.com

FASEK –PIPELINE TECHNOLOGY

VALVE TECHNOLOGY

FASEK ENGINEERING AND PRODUCTION GMBH

HARTMANN ARMATUREN

SAMSON

COOPER CAMERON VALVES

JC Ball Valves

BREDA ENERGIA

AVK

ORION

start page

FASEK

homepage : www.fasek.com

email : austria@fasek.com

FASEK –PIPELINE TECHNOLOGY

COOPER CAMERON VALVES

- FORGED BODY AND BALL
- MAXIMUM STRENGTH-MINIMUM WEIGHT
- NON-LUBRICATED
- DOUBLE BLOCK AND BLEED
- SECONDARY SEAT SEAL
- AUTOMATIC INTERNAL RELIEF OF BODY PRESSURE
- FIRE TESTED TO RECOGNIZED STANDARDS

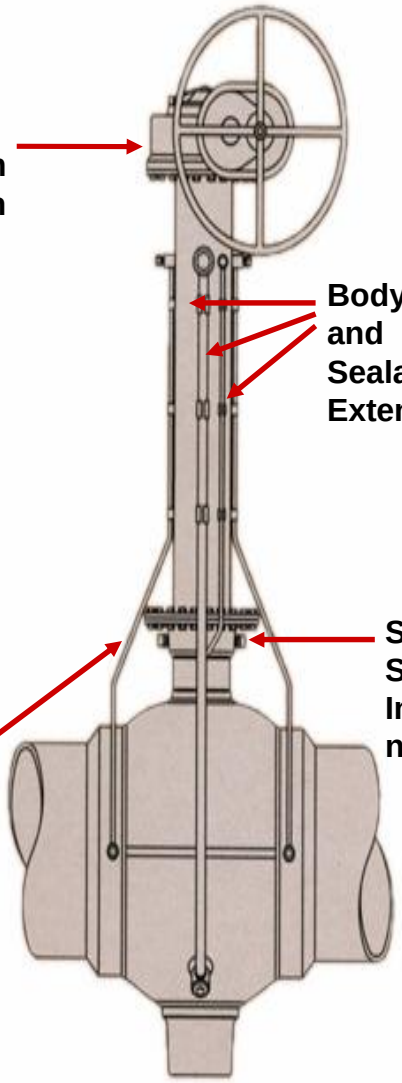

start page

FASEK

homepage : www.fasek.com

email : austria@fasek.com

FASEK –PIPELINE TECHNOLOGY

COOPER CAMERON VALVES

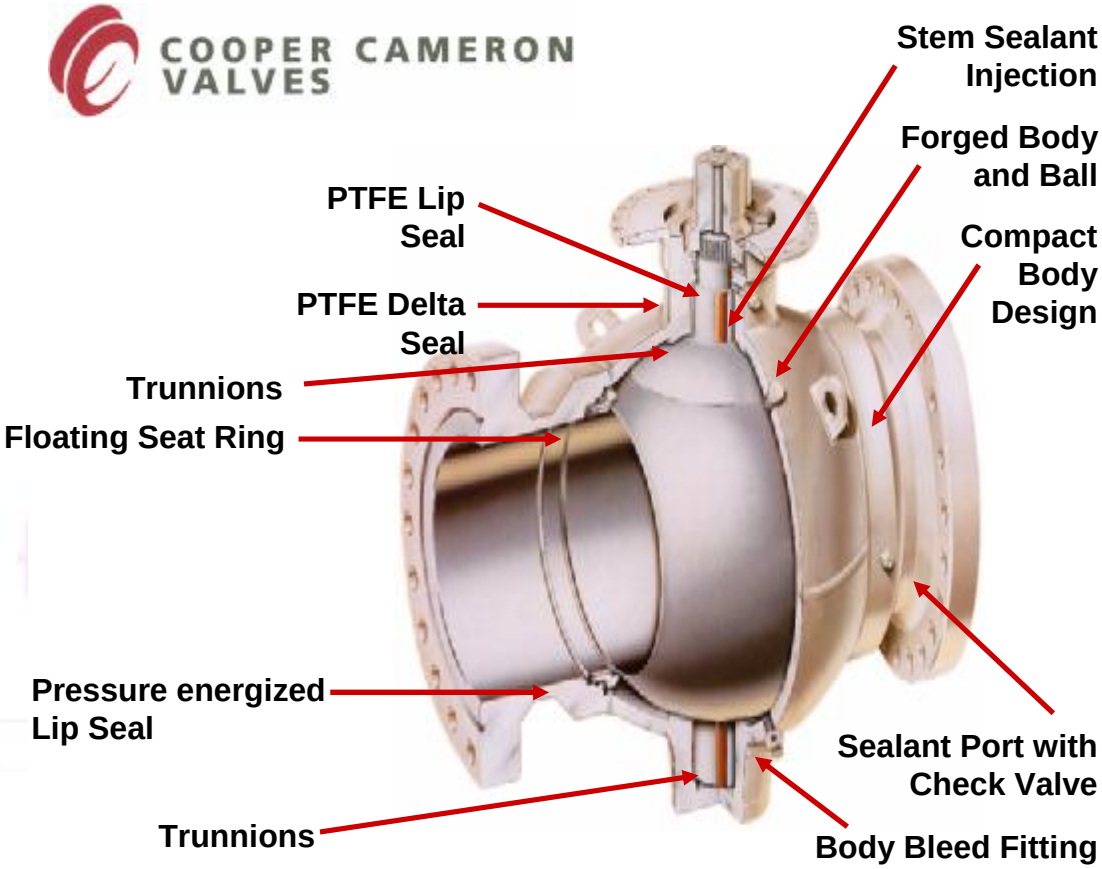

- 2“ through 56“
- Class 150 through 2500
- API 2000 through 5000
- Flanged, Welded or Weld x Flange End Connections
- Full, Reduced and Venturi Openings
- Lever or Gear Operators
- Pneumatic, Hydraulic or Electric Operators
- Stem, Vent, and Sealant Extensions
- Forged pressure containing components
- Trunnion supported
- Low operating torque
- Double block and bleed
- Three stem seals
- Backseated stem
- Fire tested to recognized standards
- Automatic internal relief of body pressure
- Wide varity of trims

start page

FASEK

Trunnion Mounting

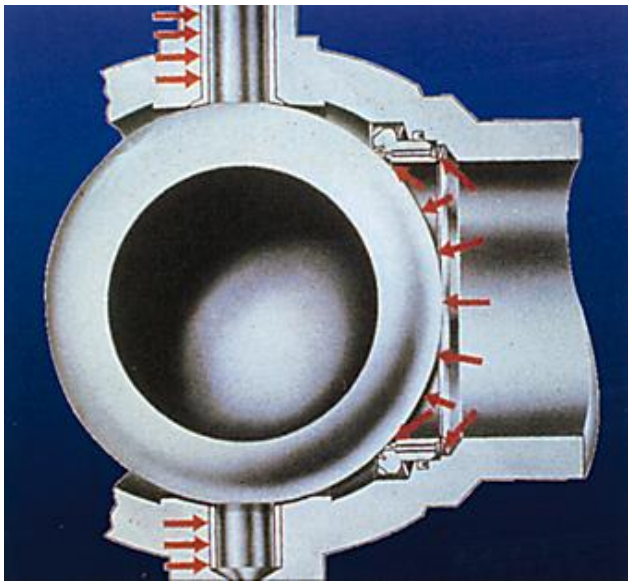

Regardless of size or pressure rating, every Cameron ball valve is trunnion-mounted. High strength forged stems are located in PTFE-impregnated stainless steel bearings for smooth, accurate operations. Trunnion mounted stems absorb the thrust from line pressure, preventing excess friction beween the ball seats, so even at full rated working pressure, operating torque stays low.

Stem Seals

Cameron ball valves incorporate delta and lip seals made of PTFE in the upper stem area. PTFE is a low friction, non-deteriorating material that is not subject to rapid decompression explosion. Valve stem sizes 2“ and larger have a provision for the injection of sealant to establish a secondary seal.

FASEK –PIPELINE TECHNOLOGY

Double Block and Bleed

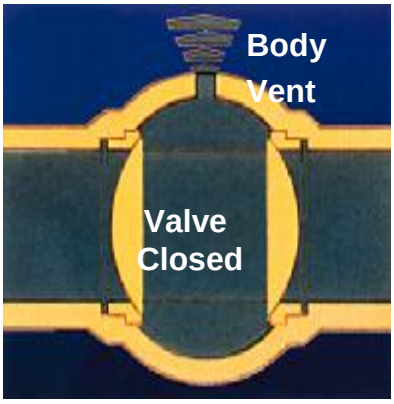

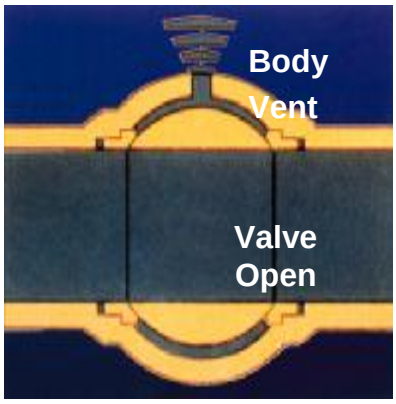

Whether in the open or closed position, pressure on each side of the ball is blocked from the body cavity by the seat ring. The body cavity can be blown down or drained through the body port.

Automatic Internal Relief of Body Pressure

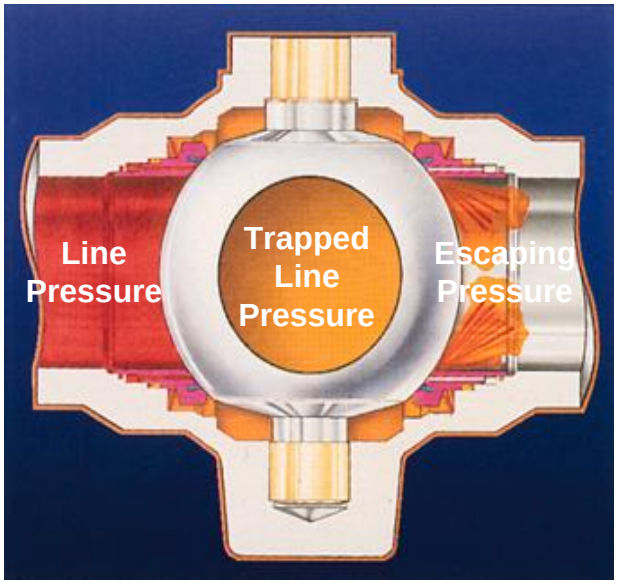

Relief of excess body cavity pressure is automatic, avoiding dangerous pressure build-up. Any pressure exceeding downstream line pressure by approximately 200 psi pushes the downstream seat away from the ball, allowing the pressure to escape into the pipeline.

start page

FASEK

Automatic Adjusting Seats

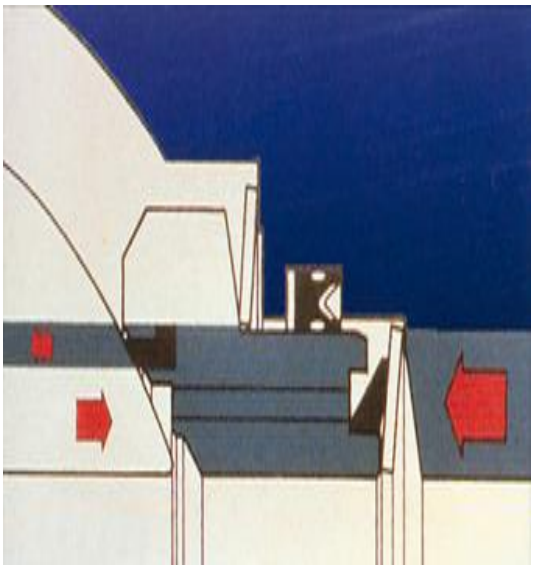

At low pressures, seat-to-ball contact is maintained by Bellville springs. At higher pressures, seat contact is reinforced by line pressure. Tight long term shut-off is obtained by Nylon seat inserts which are firmly locked into the seat ring. If required, substitute materials can be used in the insert of the ring. Pressure energized lip seals made from PTFE are used between the seat ring and the inside of the body.

Rotating Seats

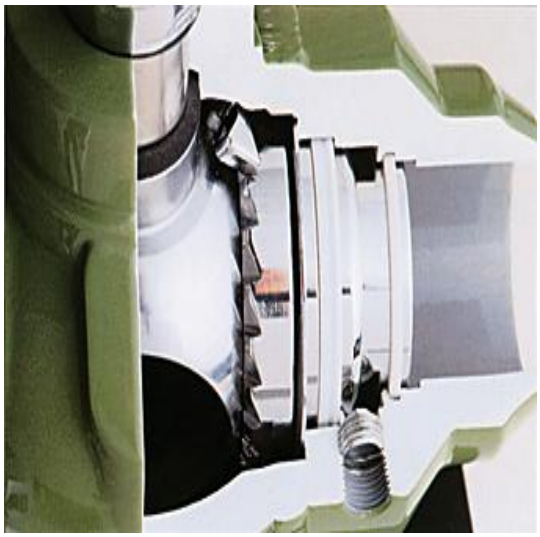

Cameron ball valve sizes 14“ and larger incorporate the exclusive rotating seat feature. Both seats rotate 15 degrees each time the valve is closed, exposing a fresh sealing surface to the critical area where flow is pinched off.

FASEK –PIPELINE TECHNOLOGY

Secondary Seat Seal

The secondary seat seal sealant injection systems provides a fast simple way of restoring tight shut-off if any foreign object should damage the sealing surface. The injection system can also be used for routine flushing of the seat ring area in services where this may be required.

Seat Features

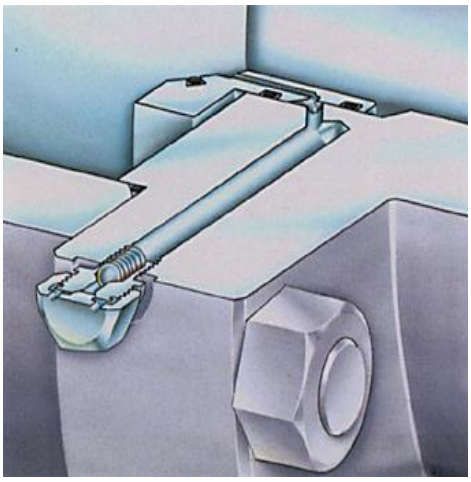

Seat rings are spring loaded for low pressure sealing. For higher pressure sealing, the differential area between the seat O.D. seal and face seal enhances the seal.

- Standard upstream sealing configuration with body cavity relief within the pipeline.
- Bi-directional sealing seat option.
- Either configuration will double block and bleed.
- Sealant injection facility available on most sizes when specified.

start page

FASEK

FASEK –PIPELINE TECHNOLOGY

- SIZES 2“ TO 36“
- CLASSES 150 TO 1500
- API 2000 THROUGH 5000
- FLANGED, WELDED OR WELD X FLANGED ENDS
- FULL, REDUCED OR VENTURI OPENINGS
- LEVER OR GEAR OPERATORS
- ANY KIND OF ACTUATORS
- STEM, VENT AND SEALANT EXTENSIONS
- BI-DIRECTIONAL SEAT SEALING OPTION

SPLIT BODY BALL VALVES

TOP ENTRY BALL VALVES

SIDE ENTRY BALL VALVES

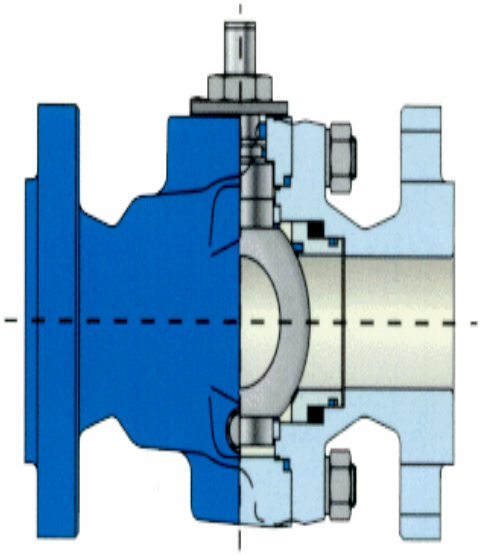

- BALL VALVES 1“-16“
- ANSI 150 - 2500
- API 10.000 (610 BAR)
- SPLIT BODY
- TOP ENTRY
- HOT SEAL
- PIG VALVES
- SOFT AND METAL SEATED
- FIRE SAFE
- DVGW, TÜV
- DIN AND ANSI STANDARD
- WELDING OR FLANGED ENDS

start page

FASEK

homepage : www.fasek.com

email : austria@fasek.com

FASEK –PIPELINE TECHNOLOGY

BREDA ENERGIA

API 6D BALL VALVES

Split Body Side Entry DN 2“ up to 60“

Side Entry Fully Welded DN 2“ up to 60“

Top Entry DN 2“ up to 60“

ANSI Class 150 up to 2500

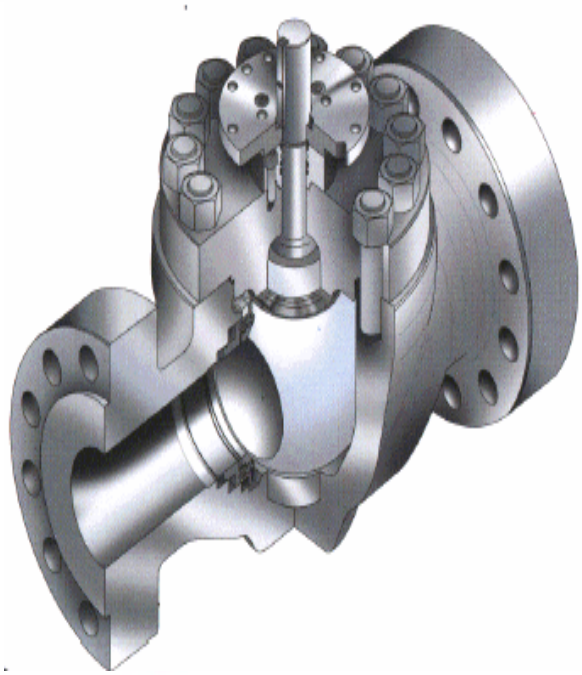

Flanges in accordance with ANSI B 16.5 and MSS-SP-44

Buttwelding end in accordance With ANSI B 16.25

Upon request : clamped ends or Pup pieces ends

start page

FASEK

homepage : www.fasek.com

email : austria@fasek.com

FASEK –PIPELINE TECHNOLOGY

BREDA ENERGIA

Standard Features :

Self relieving seat
Antistatic device
Stem Grease Fitting

Option Features :

Fire Safe Design
Double piston effect
Emergency Seat Seal
Stem extension for buried valves

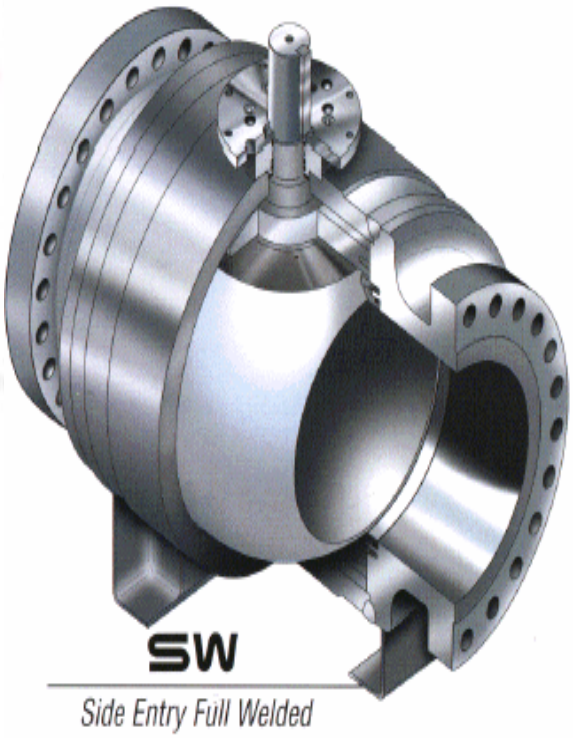

High Performance Valves :

Metal to Metal Seat
Subsea Valves
Low Temperature Valves
High Temperature Valves
Hydraulic Seats

start page

FASEK

homepage : www.fasek.com

email : austria@fasek.com

FASEK –PIPELINE TECHNOLOGY

HARTMANN ARMATUREN

- BALL VALVES 1“-16“
- ANSI 150 - 2500
- API 10.000 (610 BAR)
- SPLIT BODY
- TOP ENTRY
- HOT SEAL
- PIG VALVES
- SOFT AND METAL SEATED
- FIRE SAFE
- DVGW, TÜV
- DIN AND ANSI STANDARD
- WELDING OR FLANGED ENDS

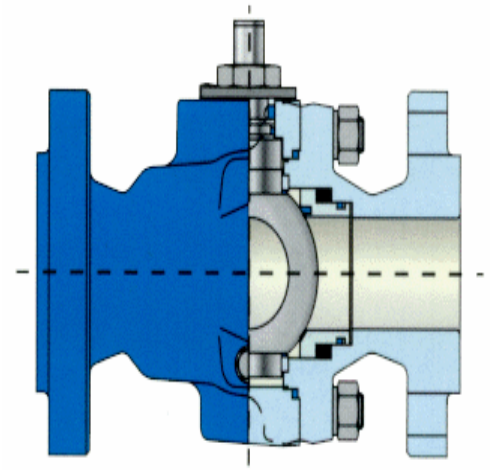

- BALL VALVE TYPE AST
- TRUNNION MOUNTED BALL VALVE
- SPLIT BODY DESIGN
- DN 2“ - 16“
- UP TO 250 BAR

start page

FASEK

homepage : www.fasek.com

email : austria@fasek.com

FASEK –PIPELINE TECHNOLOGY

HARTMANN ARMATUREN

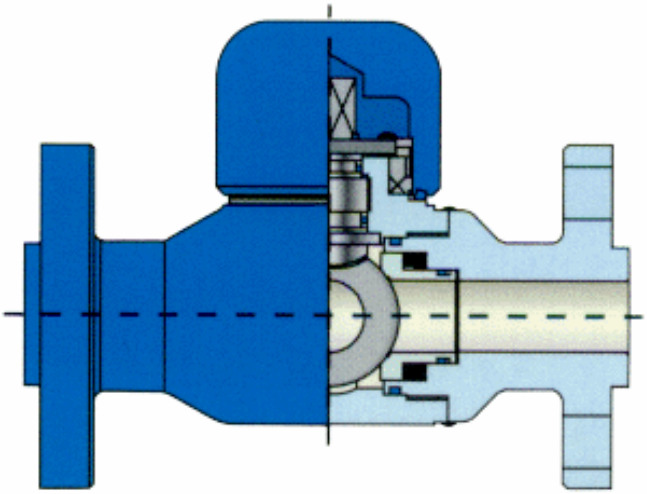

- **BALL VALVE TYPE ASFS**
- **WELDED BODY**
- **FLOATING BALL**
- **PRESSURE CAP**
- **DN 1/2“ - 2“**
- **UP TO 250 BAR**

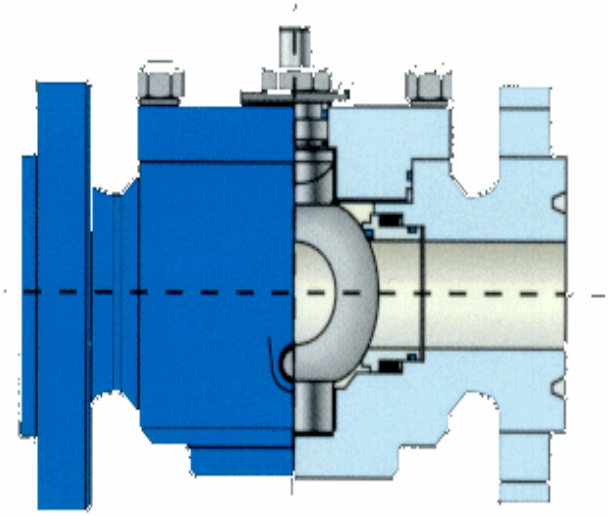

- **BALL VALVE TYPE U**
- **„ONE PIECE BODY“**
- **SERVICE WITHOUT TAKING OUT OF THE PIPELINE**
- **DN 2“ - 10“**
- **UP TO 610 BAR**

start page

FASEK

homepage : www.fasek.com

email : austria@fasek.com

FASEK –PIPELINE TECHNOLOGY

HARTMANN ARMATUREN

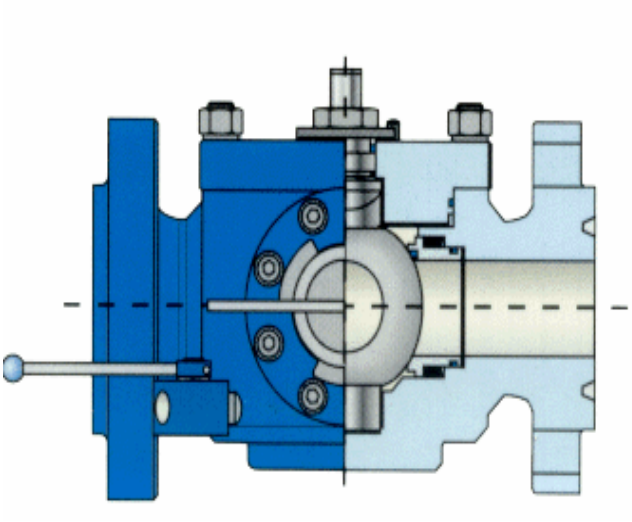

- **BALL VALVE TYPE HMR**

BALL VALVE FOR SENDING

AND RECEIVING A PIG

DN 2“ - 12“
UP TO 250 BAR

- **HOTSEAL**

METAL TO METAL SEATED

PRESSURIZED SEATS

TEMPERATURE RANGE

-150 °C BIS +540°C

start page

FASEK

FASEK –PIPELINE TECHNOLOGY

JC

- BALL VALVES ½“-20“
- ANSI 150 - 600
- SPLIT BODY
- SOFT AND METAL SEATED
- DIN AND ANSI STANDARD
- FIRE SAFE
- DVGW
- TA-LUFT
- TRUNNION OR FLOATING BALL

BALL VALVE

FLOATING
BALL
FIXED
SEATS

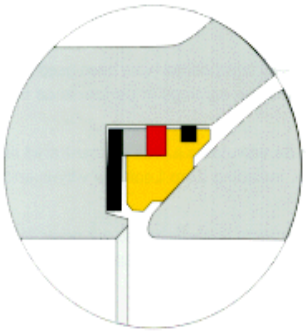

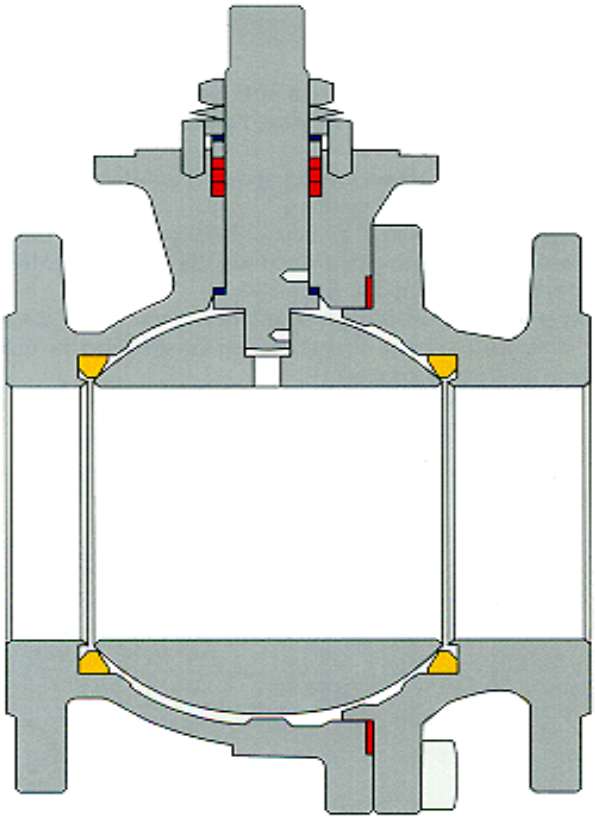

start page

FASEK

homepage : www.fasek.com

email : austria@fasek.com

FASEK –PIPELINE TECHNOLOGY

BALL VALVE

TRUNNION MOUNTED
FIXED SEATS

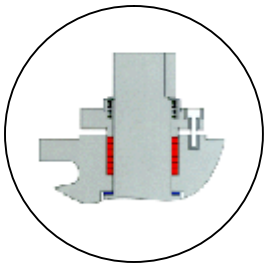

STEM AREA

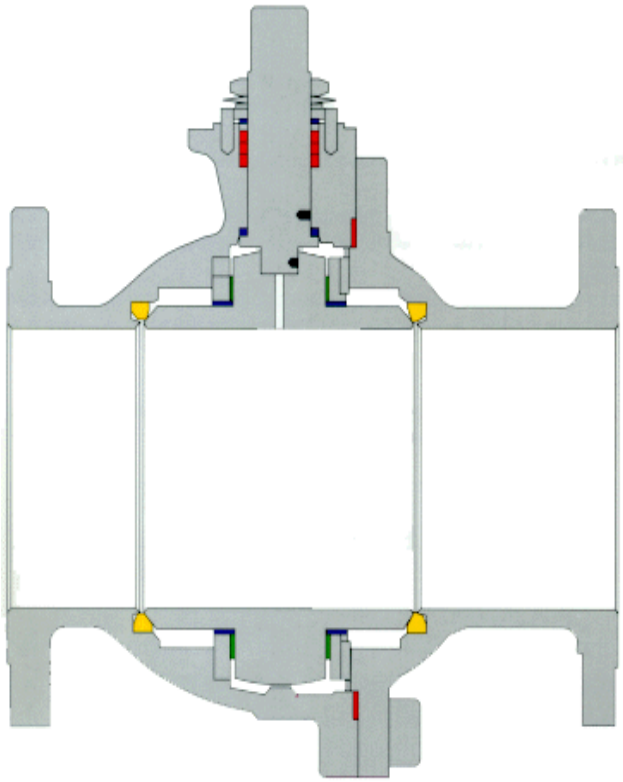

BALL VALVE

WITH SPRING LOADED SEATS

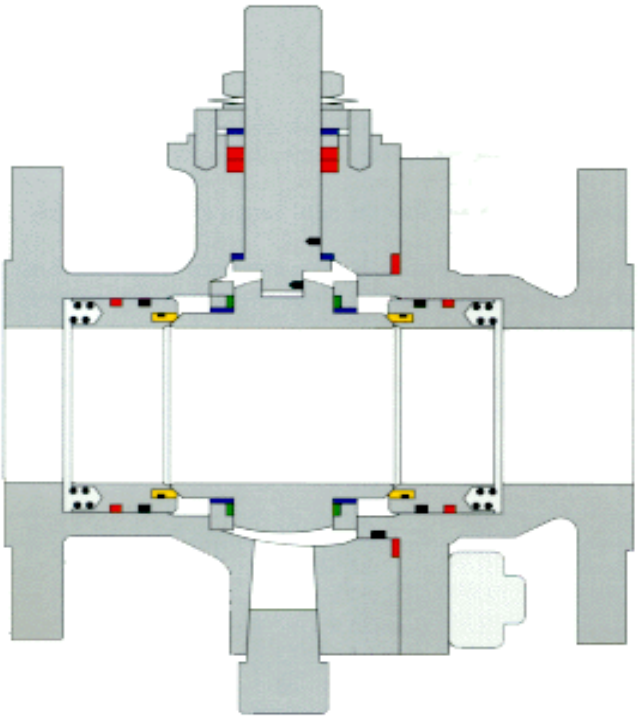

SEAT DETAIL

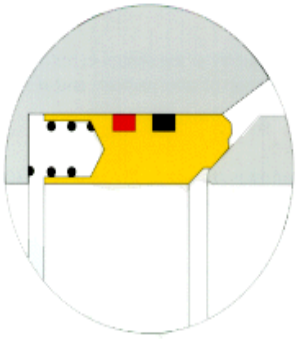

start page

FASEK

homepage : www.fasek.com

email : austria@fasek.com

FASEK –PIPELINE TECHNOLOGY

FEATURES

Oxygen service

Cavity filler

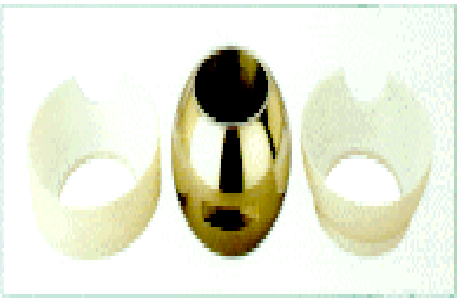

Oval handwheel

Valves for cryogenic service

Locking device

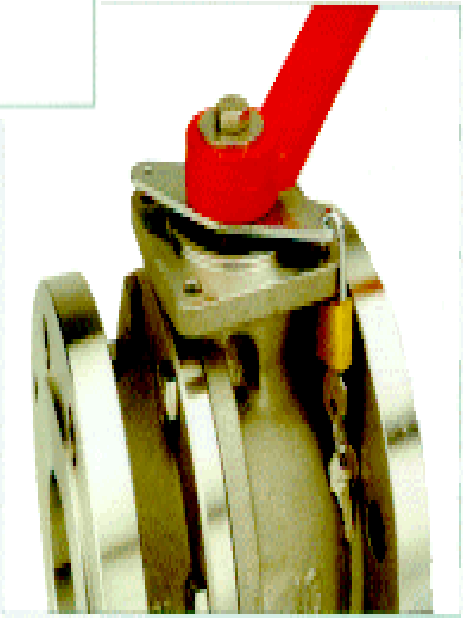

start page

FASEK

homepage : www.fasek.com

email : austria@fasek.com

FASEK –PIPELINE TECHNOLOGY

BREDA ENERGIA

API 6D GATE VALVES

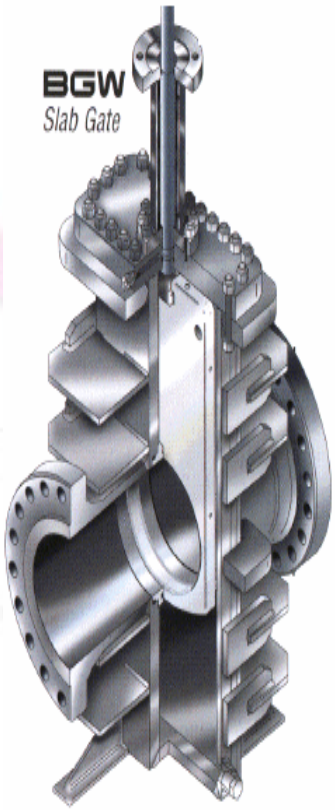

BGW type

DN 6“ up to 60“
ANSI 150 up to 1500
Welded steel plates with reinforce ribs

BGC type

DN 6“ up to 60“
ANSI 150 up to 1500
Casting construction

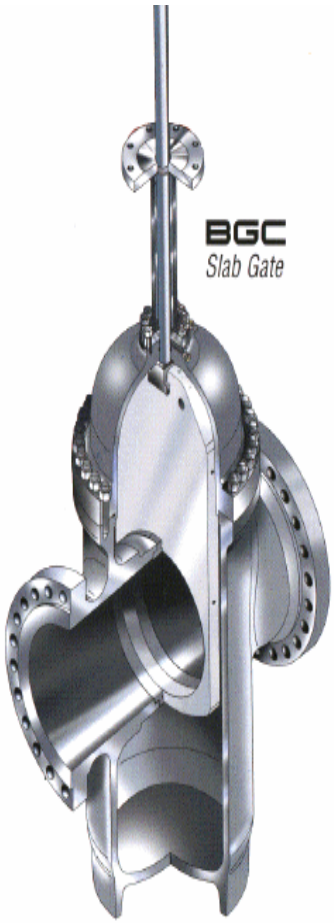

Standard Features :

Stem self energized not rolling lip seal
Trough conduit, self cleaning , floating slab gate
Floating seat always in contact with gate
Double block and bleed design

Option Features :

Fire Safe Design
Emergency Seat Seal
Reverse Acting Gate
O & SY Bonnet

start page

FASEK

homepage : www.fasek.com

email : austria@fasek.com

FASEK –PIPELINE TECHNOLOGY

BREDA ENERGIA

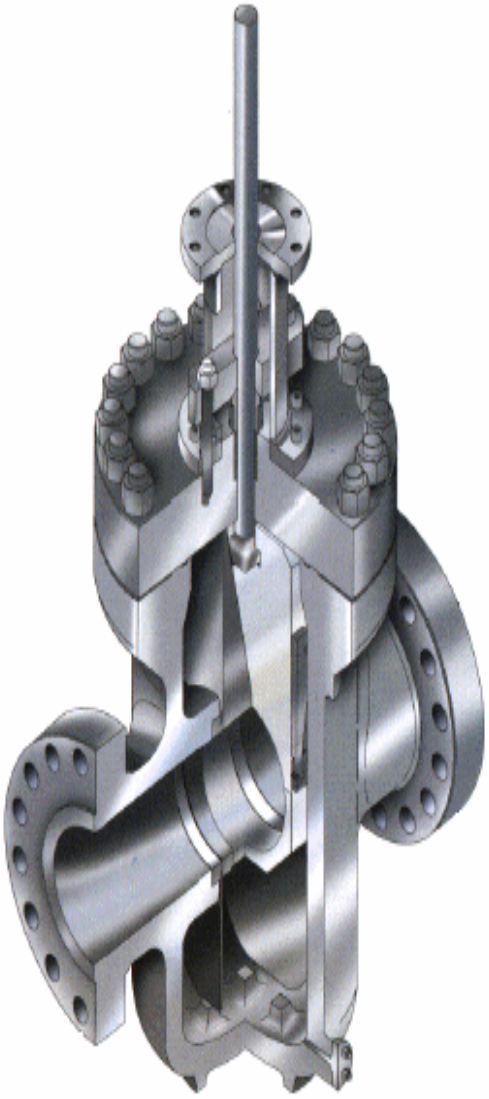

MSD type

DN 2“ up to 48“
ANSI 150 up to 2500

Casting construction
Expanding gate

Standard Features :

Metal to Metal Seats
Stem grease fitting
Double block and bleed design

Option Features :

Fire Safe Design
Emergency Seat Seal
O & SY Bonnet

start page

FASEK

homepage : www.fasek.com

email : austria@fasek.com

FASEK –PIPELINE TECHNOLOGY

ORION

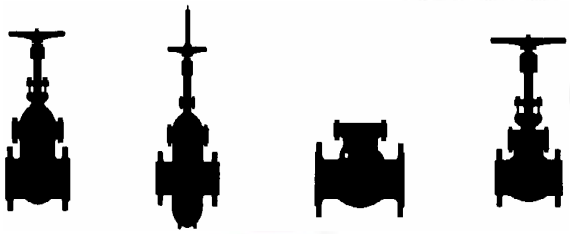

- GATE VALVES FROM 2" UP TO 48" CLASS 150 TO 2500
- SINGLE DISC CONDUIT TYPE FROM 4" UP TO 40" CLASS 600
- GLOBE AND FLANGED ENDS 2" UP TO 40" ANSI CLASS 150 - 2500
- SWING CHECK VALVES, 2" UP TO 42" ANSI CLASS 150 - 2500
- SEAL BONNET VALVES 2" UP TO 16" ANSI CLASS 600 - 1500

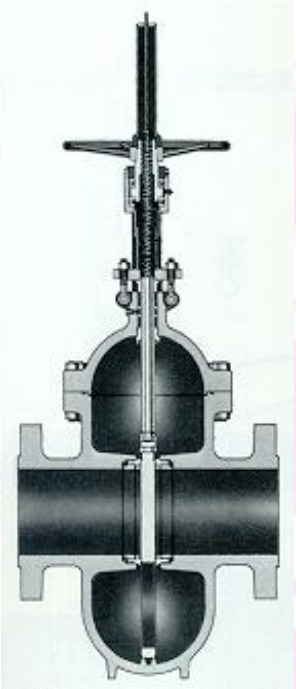

start page

FASEK

homepage : www.fasek.com

email : austria@fasek.com

FASEK –PIPELINE TECHNOLOGY

ORION

GATE VALVES

- flexible wedge type acc. to API 600
- metal seated seatring
- bolted bonnet
- temperature range -31°C up to 46°C
- body material: ASTM A 352 LCB
- trim no. 1 (F6)
- disc: ASTM A 105 + ENP
- stem: ASTM A 182 F6 (13% Cr.)
- stem seals: PTFE with graphite top ring
- bolting: A193 B7-2H
- flanged ends to ANSI B 16.5 RF
- test: to API 598 STD or 6D STD
- painting: zinc primer 75 mµ

flex wedge

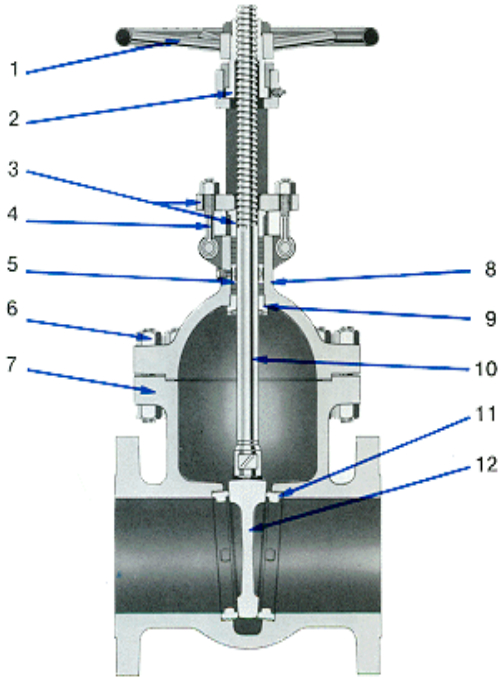

1	Handwheel
2	Yoke Sleeve
3	Gland and Flange
4	Gland Bolds and Nuts
5	Lantern
6	Bonnet Bolting
7	Body
8	Bonnet
9	Bonnet bushing
10	Stem - T head
11	Seat Rings
12	Wedge -Solid or Flex Wedge

start page

FASEK

FASEK –PIPELINE TECHNOLOGY

ORION

GLOBE AND ANGLE VALVES

- regulating disc
- metal seated seatring
- bolted bonnet
- temperature range -31°C up to 46°C
- body material: ASTM A 352 LCB
- trim no. 1 (F6)
- stem: ASTM A 182 F6 (13% Cr.)
- stem seals: PTFE with graphite top ring
- flanged ends to ANSI B 16.5 RF
- bolting: A193 B7-2H
- test: to API 598 STD or 6D STD
- painting: zinc primer 75 mµ

regulating disc

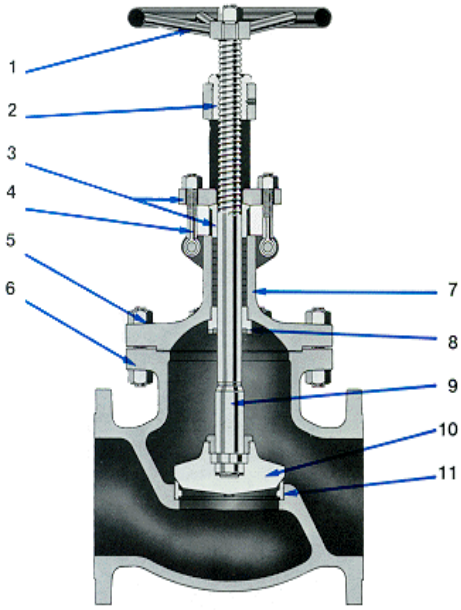

1	Handwheel
2	Yoke Sleeve
3	Gland and Flange
4	Gland Bolds and Nuts
5	Bonnet Bolting
6	Body
7	Bonnet
8	Bonnet bushing
9	Stem
10	Disc flat, tapered, plug or regulating type
11	Seat Rings

start page

FASEK

FASEK –PIPELINE TECHNOLOGY

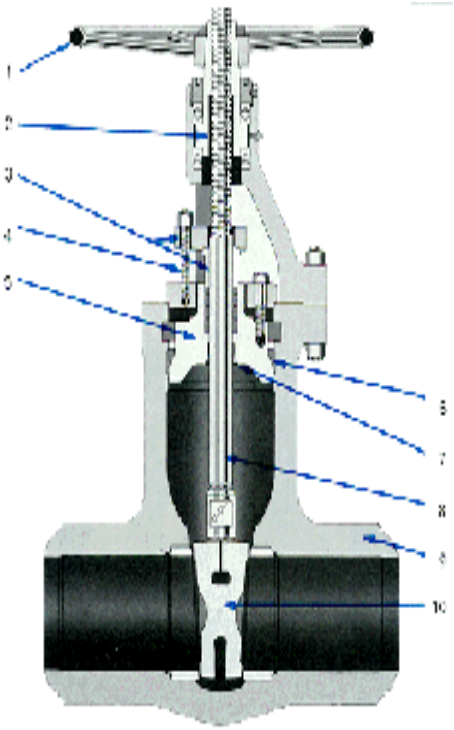

SEAL BONNET VALVES

WELDED AND FLANGED ENDS

- **Size 2“ up to 16 “**
- **Pressure Class ANSI 600 up to ANSI 1500**

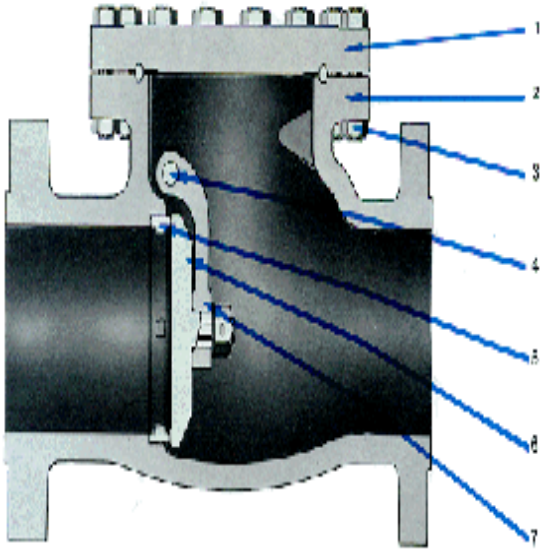

- **1 Cap**
- **2 Body**
- **3 Bonnet Bolting**
- **4 Hinge Pin**
- **5 Seat Ring**
- **6 Disc**
- **7 Hinge**

start page

FASEK

FASEK –PIPELINE TECHNOLOGY

WELLHEADS X-MAS TREES

HORIZONTAL XMAS TREE

GEOTHERMAL SYSTEMS

WELLHEADS FOR ONSHORE AND FIXED PLATFORMS
WITH SINGLE SOLID BLOCK OR MULTIPARTS X-MAS TREES

Services :
SWEET, SOUR,
HIGH CORROSIVE (H2S,CO2, NACL) MEDIUM
WATER, GAS INJECTION, STEAM INJECTION

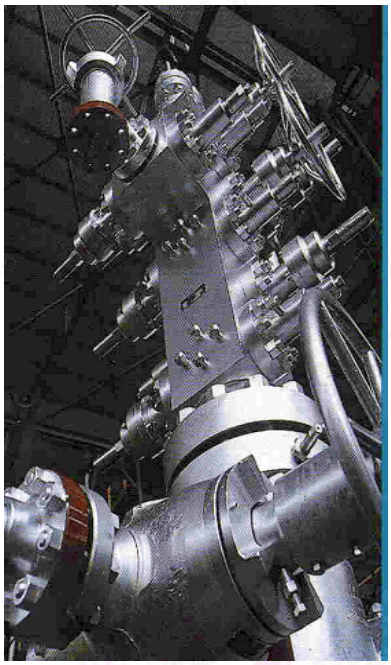

X-MAS TREES SIZES 2“ THROUGH 9“
TEMPERATURES -60°C up to +140°C
PRESSURE UP TO 15000 PSI
STANDARD API 6A

start page

FASEK

homepage : www.fasek.com

email : austria@fasek.com

FASEK –PIPELINE TECHNOLOGY

UNITIZED WELLHEADS

ADVANTAGES OF UNITIZED WELLHEADS :

SAFETY

SPACE

INSTALLATION TIME

DESIGN

CENTRALIZED CONTROL UNIT
TO SHUT DOWN THE WELL IN CASE OF FIRE
RUPTURE OR
OTHER EMERGENCY PARAMETERS

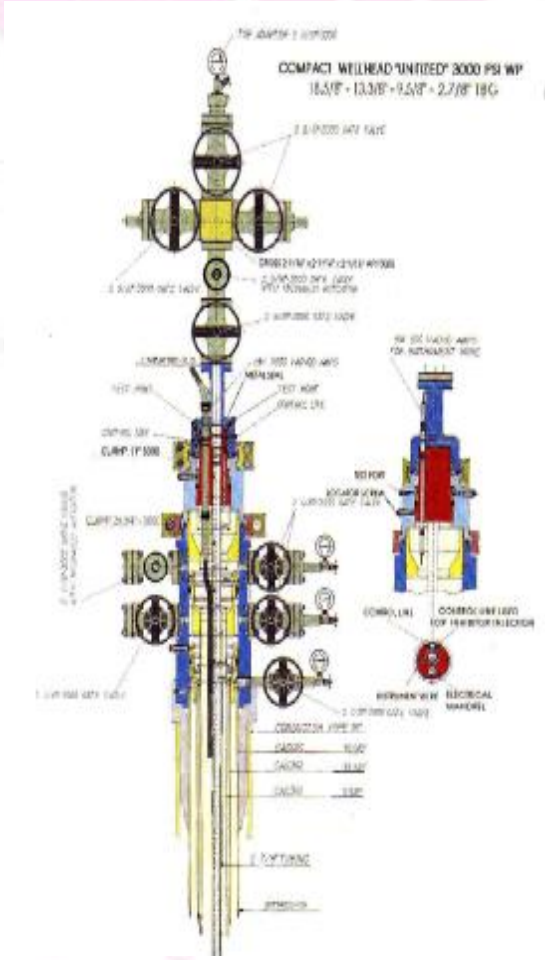

IN CLAD TRIM

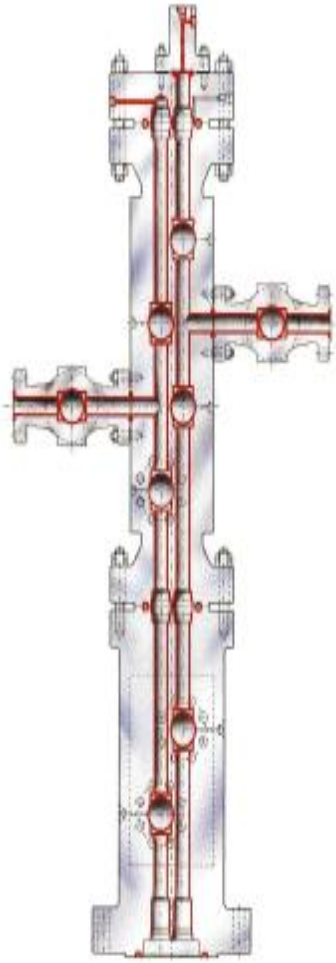

IN ORDER TO WITHSTAND CORROSION AND AGRESSIVE ENVIRONMENT WE DELIVER THE SO CALLED INCLAD TRIM WHICH IS A WELDED PROTECTIVE OVERLAY OF ALLOY 625 WITH LESS THAN 4 % IRON CONTENT

start page

FASEK

homepage : www.fasek.com

email : austria@fasek.com

FASEK –PIPELINE TECHNOLOGY

A MEMBER OF THE WOTHERWELL BRIDGE GROUP

PRODUCTION RANGE

- FLOATING ROOF SEALS
- HEAT EXCHANGERS
- TANK STORAGE BUILDINGS
- FLAME ARRESTORS
- BREATHING VALVES
- TANK VALVES

start page

FASEK

homepage : www.fasek.com

email : austria@fasek.com

FASEK –PIPELINE TECHNOLOGY

MOTHERWELL
COMPOSITE STRUCTURE

- **ROOFS**
- **HAND RAILS**
- **BALUSTRADES**
- **PLATFORMS**
- **STAGES**

start page

FASEK

homepage : www.fasek.com

email : austria@fasek.com

FASEK –PIPELINE TECHNOLOGY

MOTHERWELL BRIDGE THERMAL

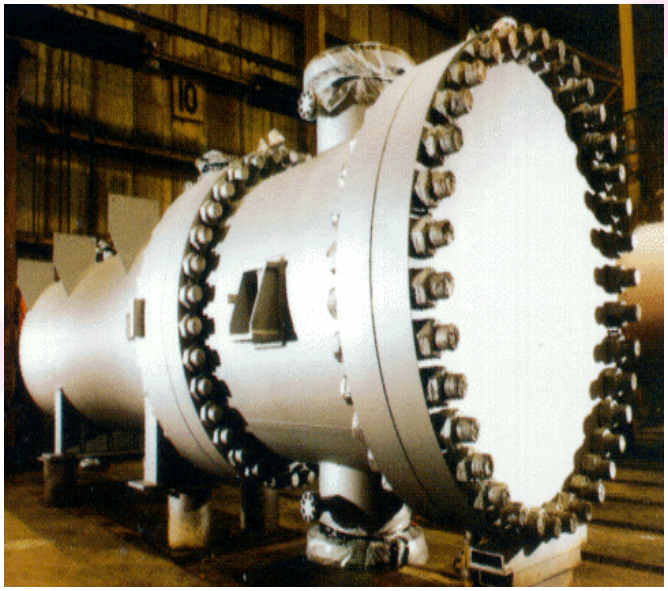

- HEAT EXCHANGER
- SEPERATORS

MOTHERWELL CONTROL SYSTEMS LIMITED

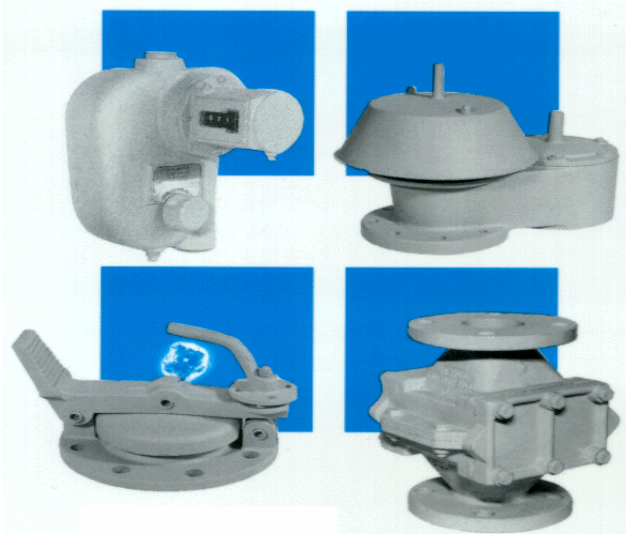

- VALVES AND FITTINGS,
- FLAME ARRESTER,
- OVER AND UNDER PRESSURE VALVES
- BREATHING VALVES,
- AND SO ON

start page

FASEK

homepage : www.fasek.com

email : austria@fasek.com

FASEK –PIPELINE TECHNOLOGY

PRIMARY SEAL FOR WELDED TANK SHELLS

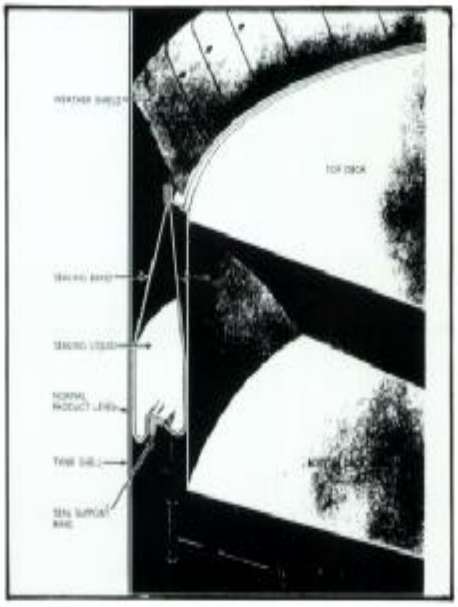

MN-5 Seal

The liquid-filled fabric seal. The tube is filled to a depth of 8" or 10" with sealing liquid. The sealing bands are made of rugged nylon cloth coated with synthetic rubber, compounded for excellent resistance to abrasion and high aromatics of petroleum and chemical stocks. The serrated scuff-band acts as an excellent "wiper/scraper" to remove deposits of waxy crudes from the tank shell.
MN-5 Seals manufactured by Motherwell Nayler Petroseals are available in widths for all diameters of tanks.
Aromatic Resistance – up to 100%.

PRIMARY SEAL FOR WELDED TANK SHELLS

MN-7 Seal
MN-7A Seal

The resilient foam seal. The resilient foam holds the envelope against the tank shell. A tough endless envelope completely covers and protects the foam. The envelope is extremely abrasion resistant. The design ensures a mild and positive pressure against the tank shell, completely filling the rim space even on out-of-round tank shells. The MN-7 Seal can be serviced from the top of the roof. Metal Weathershields protect the Seal and provide direct electrical path between roof and tank shell. A secondary seal can be fitted as an alternative to weathershields.
Aromatic Resistance – up to 100%.

start page

FASEK

FASEK –PIPELINE TECHNOLOGY

PRIMARY SEAL FOR WELDED TANK SHELLS

WEATHERMASTER SEAL MN 8

The Weathermaster Seal is constructed from an outer envelope of tough, abrasion resistant polyurethane or PVC Nitrile material which is filled with resilient foam. This effectively closes the space between the tank shell and the floating roof. This Seal features a minimum of parts and simplicity of operation.
Aromatic Resistance – up to 100%.

PRIMARY SEAL FOR WELDED TANK SHELLS

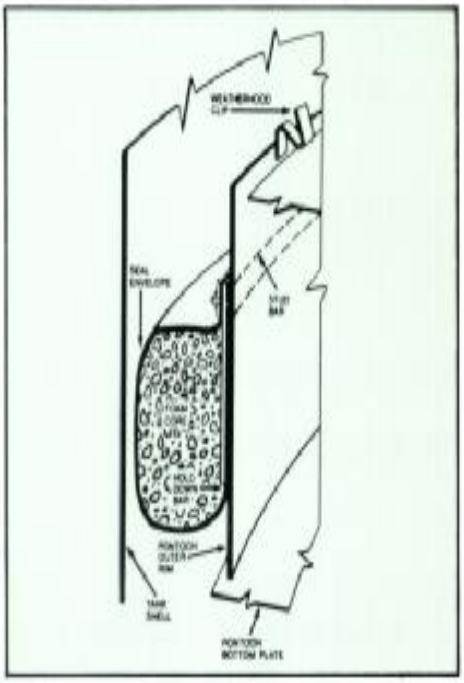

Slimline Everseal MN 13

The Everseal is designed to perfectly fill the annular space between the tank shell and the rim of the floating roof. A tough but flexible envelope ensures constant pressure and contact with the tank shell. The envelope material gives excellent resistance to abrasion. Regular maintenance of the Seal can be effected from the top of the roof.
Aromatic Resistance – up to 100%.

FASEK –PIPELINE TECHNOLOGY

TUBE SEAL MN 10

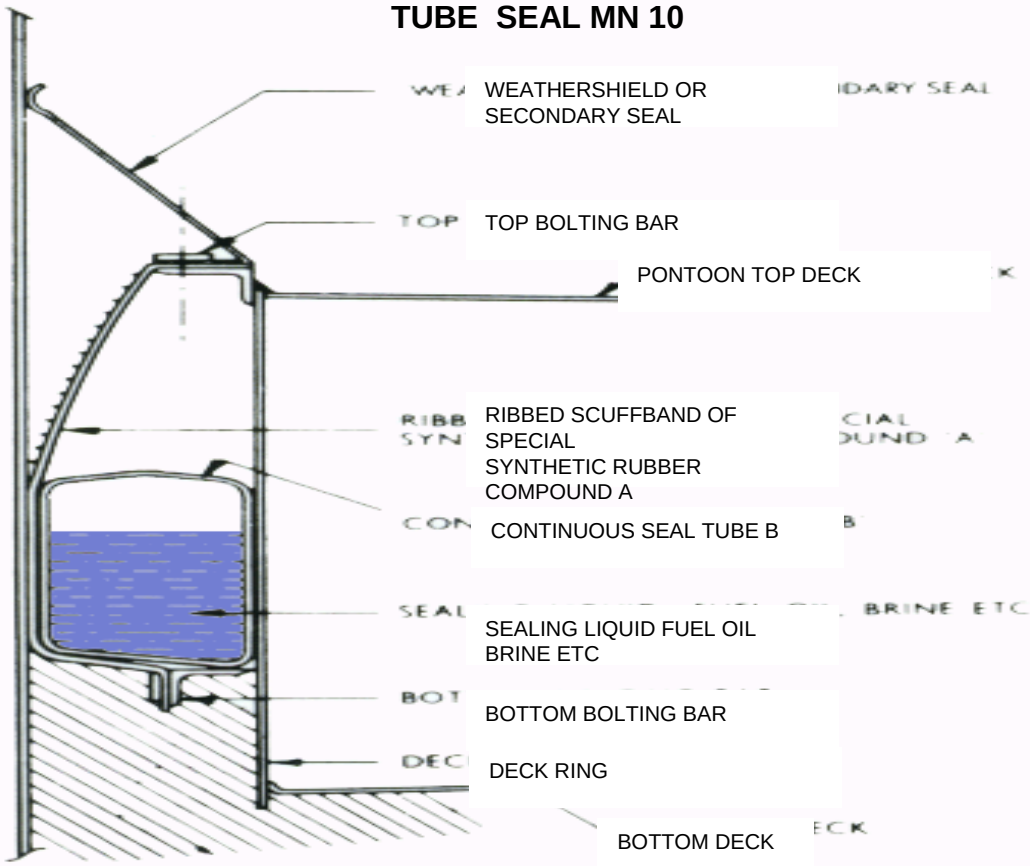

MN 11 - GRAVER FOAM

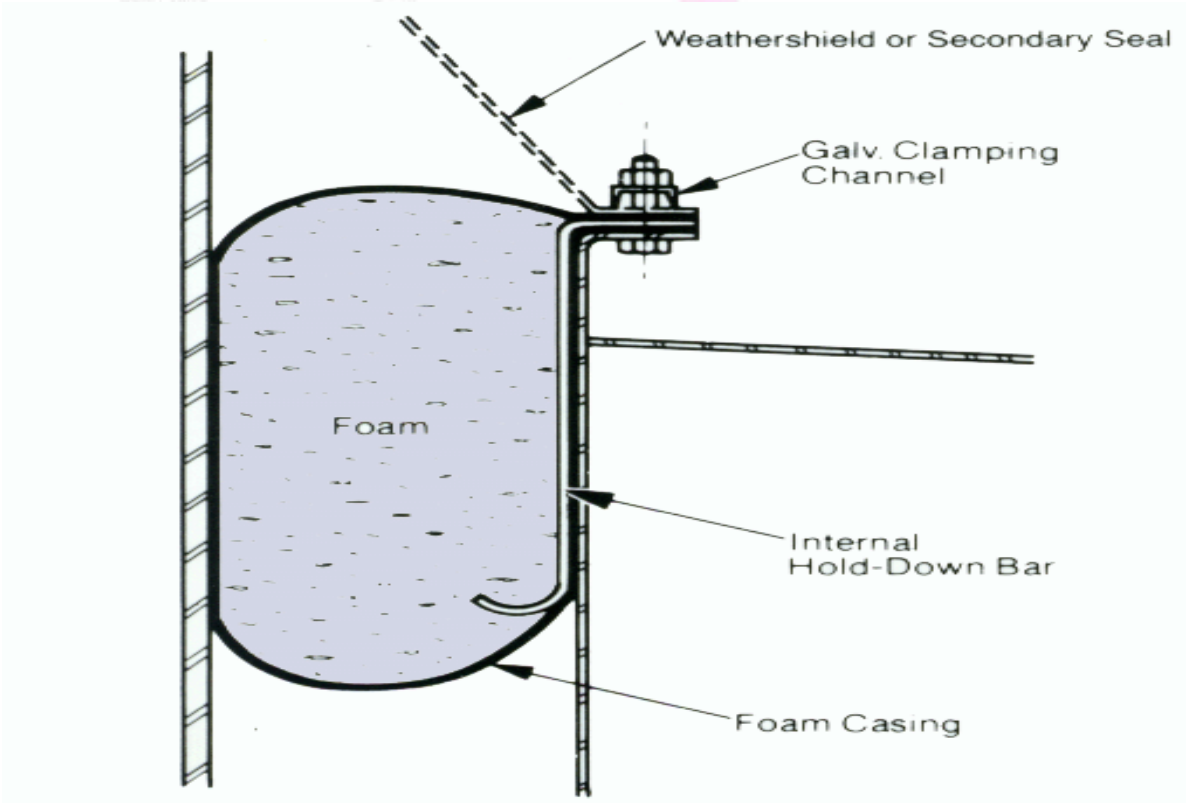

start page

FASEK

homepage : www.fasek.com

email : austria@fasek.com

FASEK –PIPELINE TECHNOLOGY

NAYFLEX SEAL MN 30

SECONDARY SEAL FOR WELDED TANKS

Proven reliability: presently operational on over 2500 tanks.

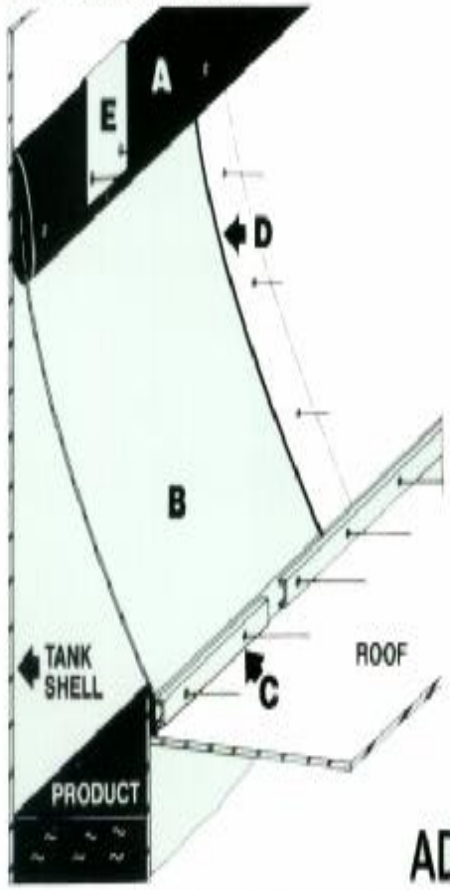

MATERIALS

A. 5" × 5/8" CONTINUOUS TIP
1. Will exceed 300,00 feet of roof travel.
2. Specially formulated to provide exceptional service life.
3. Tensile strength: 2700 P.S.I.
4. Shore hardness: 70.

B. COMPRESSION PLATE
1. Available in galvanised or stainless steel.
2. Applies positive pressure about the seal.
3. Active sealing device.

C. COMPRESSION CHANNEL

D. PLATE GASKETING
1. Closed cell material, inert.
2. Provides "leak tight" joint between plates.
3. Special cases may warrant a flexible vapour seal for corrosion protection. This alternative is available.

E. GROUND SHUNT
1. Stainless steel.
2. Positive application to shell.
3. Grounded above secondary seal wiper.

ADVANTAGES

1. Installation requires no "hot work" and can be done while a tank is in service.
2. Positive compression to the shell will:
   A. Help remove wax build-up and keep tank wall clean.
   B. Provide the capability to seal irregular and out-of-round tank shells.
3. Reduction of vaporitive losses means:
   (A) Fewer odour problems.
   (B) Cost effective compliance to air quality standards.
4. Documented long term maintenance free operations.
5. Easy access for visual inspection.
6. Can be used in virtually all service conditions including 100% Aromatic service.

MNP 112

FASEK –PIPELINE TECHNOLOGY

NAYFLEX SEAL MN 30/2
VOLUME MAXIMISING SYSTEM

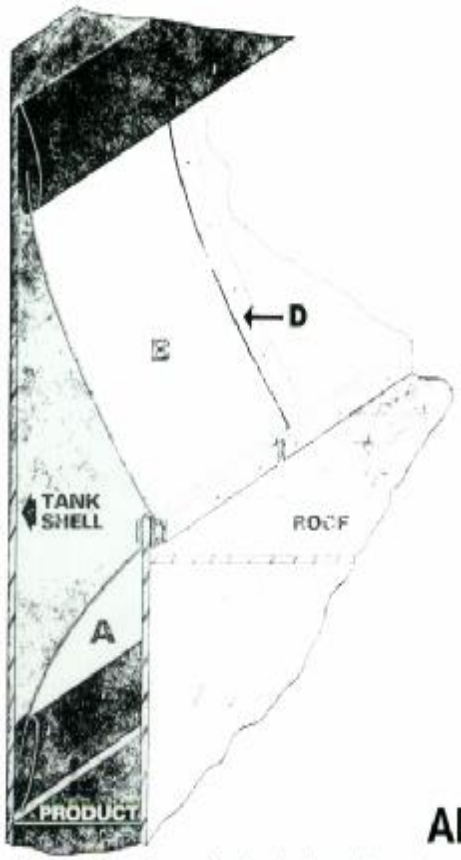

Single Seal System (A) installed in a downward position can be mounted within 2" of the product while a second seal (B) keeps water from forming in the annulus space. Thus:

1. No loss of operating volume.
2. Compliance to air quality requirements.
3. Maintenance free operation.

MATERIALS

A. 5" × 3/8 CONTINUOUS BUNA-N BASED WIPER
1. Will exceed 300,000 feet of roof travel.
2. Specially formulated to resist surface cracking induced by ultra violet exposure.
3. Tensile strength – 2700 p.s.i.
4. Shore hardness: 70.

B. COMPRESSION PLATE
1. Available in galvanised or stainless steel.
2. Applies positive pressure about the seal.
3. Active centering device.

C. COMPRESSION CHANNEL
1. Galvanised steel.
2. Fabricated to individual tank requirements.

D PLATE GASKETING
1. Closed cell neoprene material.
2. Provides "leak tight" joint between plates.
3. Special cases may warrant a flexible vapour seal for corrosion protection. This alternative is available.

E. GROUND SHUNT
1. Stainless steel.
2. Positive application to shell.
3. Grounded directly to compression plates.

ADVANTAGES

1. Installation requires no "hot work" and can be done while a tank is in service.
2. Positive compression to the shell will remove wax build-up and keep tank wall clean.
3. Keeps water out of product.
4. Virtual elimination of vaporisive losses means:
   (A) No odour problems.
   (B) Cost effective compliance to air quality standards.
5. Documented long term maintenance free operations.
6. Easy access for visual inspection.
7. Can be used in virtually all service conditions including 100% Aromatic service.

MNP 111

start page

FASEK

FASEK –PIPELINE TECHNOLOGY

NAYFLEX SEAL MN 32 - DUO TIP SEAL

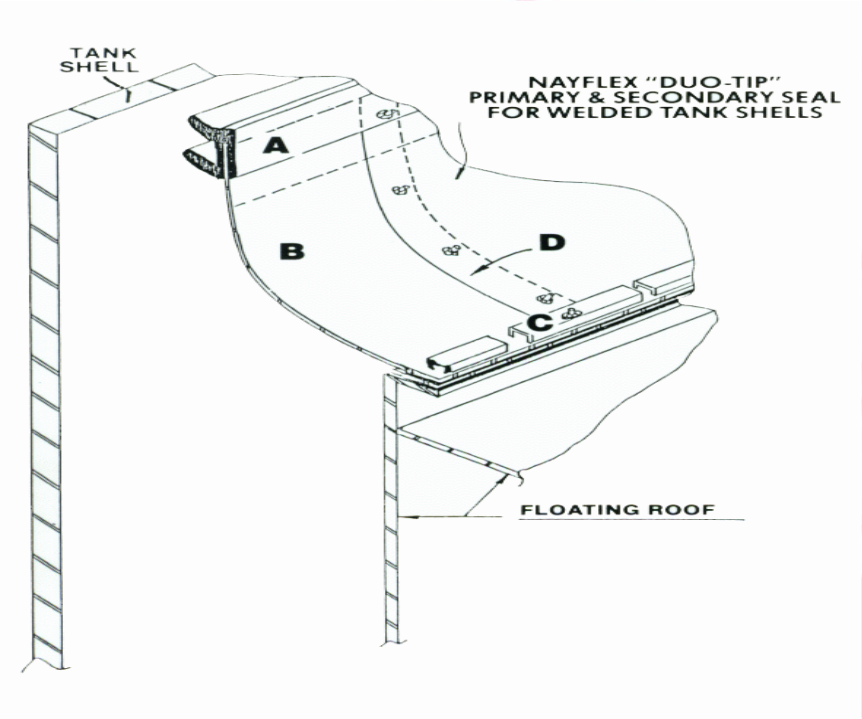

NAYFLEX SEAL MN 32/2 - DUO TIP SEAL

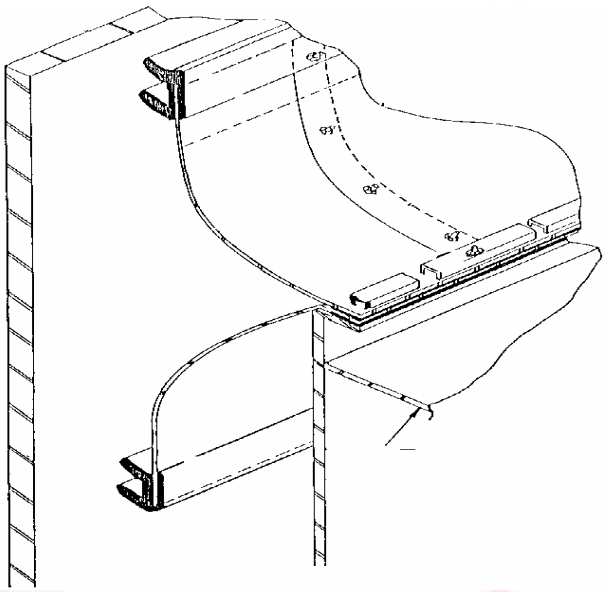

start page

FASEK

FASEK –PIPELINE TECHNOLOGY

NAYFLEX SEAL MN 32/2
DUO-TIP SEAL

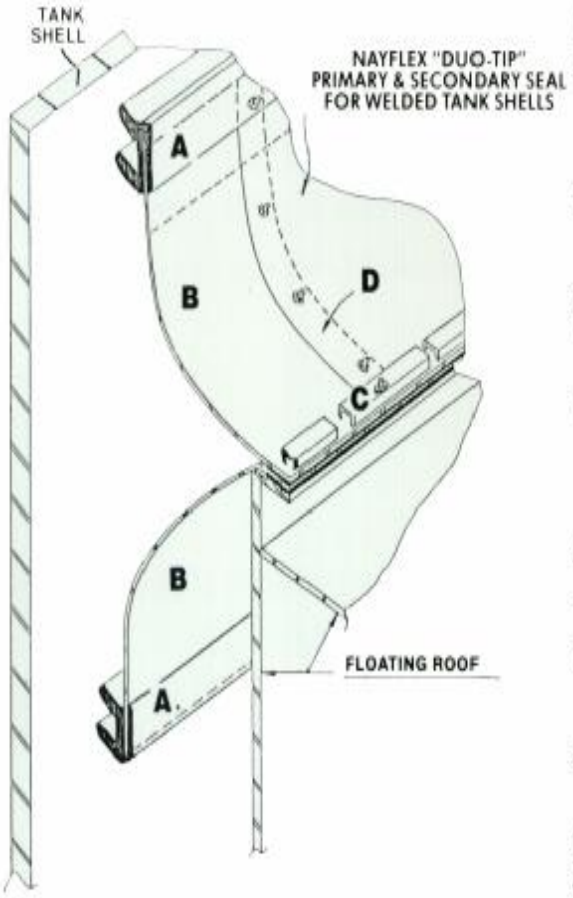

MATERIALS

A. DUO-TIP CONTINUOUS TIP
   1. Will exceed 300,000 feet of roof travel.
   2. Specially formulated to provide exceptional service life.
   3. Tensile strength: 2700 p.s.i.
   4. Shore hardness: 70.

B. COMPRESSION PLATE
   1. Available in galvanised or stainless steel.
   2. Applies positive pressure about the seal.
   3. Active sealing device.

C. COMPRESSION CHANNEL

D. PLATE GASKETING
   1. Closed cell material, inert.
   2. Provides "leak tight" joint between plates.

E. GROUND SHUNT
   1. Stainless steel.
   2. Positive application to shell.
   3. Grounded above secondary seal wiper.

ADVANTAGES

1. Installation requires no "hot work" and can be done while a tank is in service.
2. Positive compression to the shell will:
   A. Help remove wax build-up and keep tank wall clean.
   B. Provide the capability to seal irregular and out-of-round tank shells.
3. Reduction of vapontive losses means:
   (A)Fewer odour problems.
   (B)Cost effective compliance to air quality standards.
4. Documented long term maintenance free operations.
5. Easy access for visual inspection.
6. Can be used in virtually all service conditions including 100% Aromatic service.

MNP 113

start page

FASEK

FASEK –PIPELINE TECHNOLOGY

NAYFLEX SEAL MN 34

SECONDARY SEAL FOR RIVETED OPEN TOP TANKS

Universal application for both riveted, bolted and welded storage tanks as a primary or secondary seal.
Proven reliability.
Approved emission control device for riveted open top floating roof tanks.

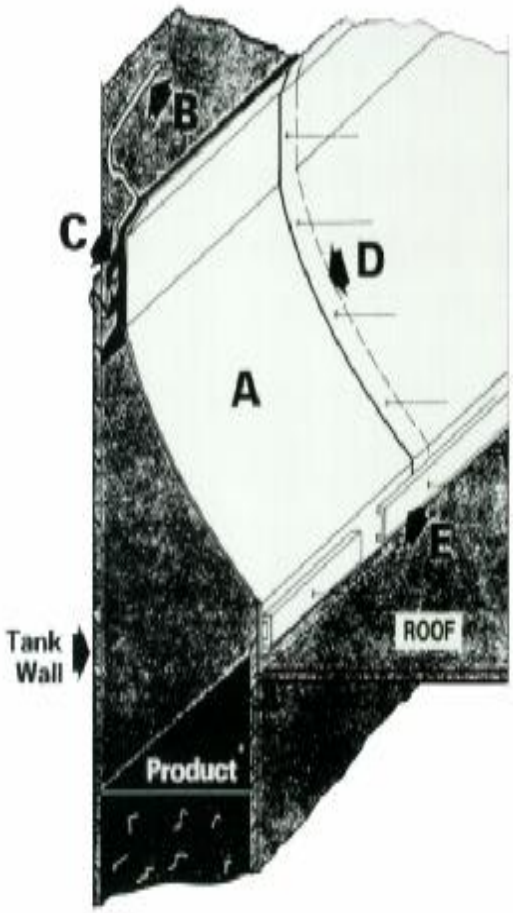

MATERIALS

A. **COMPRESSION PLATE**
   1. Galvanised steel.
   2. Stainless steel.

B. **SEAL PROFILER AND GROUND SHUNT (Stainless steel)**

C. **EXTRUDED WIPER**
   1. Highly abrasion resistant.
   2. Tensile strength – 2700 p.s.i.
   3. Specially formulated to resist surface cracking induced by ultra violet exposure.
   4. 100% Aromatic resistant.

D. Closed cell gasketing at each lap join insures a positive seal between compression plates.

E. Galvanised channels provide rigidity for positive seal compression.

APPLICATIONS

1. Primary or secondary seal on riveted tanks.
2. Primary or secondary seal on bolted tanks.
3. Primary or secondary seal on lap welded tanks.
4. Primary or secondary seal on welded tanks.
5. Primary seal on welded tanks.

ADVANTAGES

1. Installation requires no "hot work" and can be done while a tank is in service.
2. Positive compression to the shell will
   (A) Remove wax build-up and keep tank wall clean.
   (B) Provides the capability to seal irregular and out-of-round tank shells.
3. Virtual elimination of vaporitive losses means:
   (A) No odour problems.
   (B) Cost effective compliance to air quality standards.
4. Documented long term maintenance free operations.
5. Easy access for visual inspection.
6. Can be used in virtually all service conditions including 100% Aromatic service.

start page

FASEK

FASEK –PIPELINE TECHNOLOGY

NAYFLEX SEAL SECONDARY

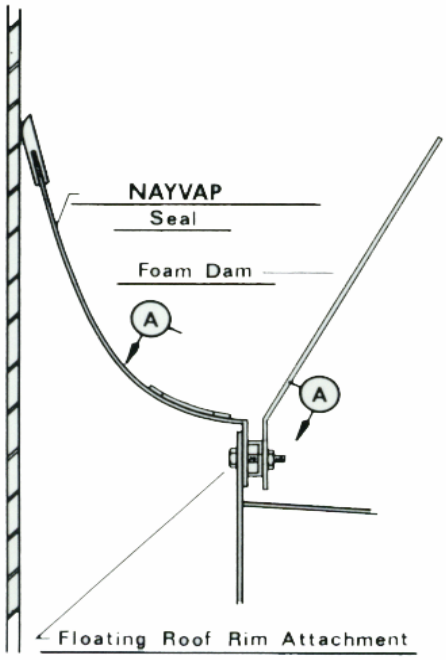

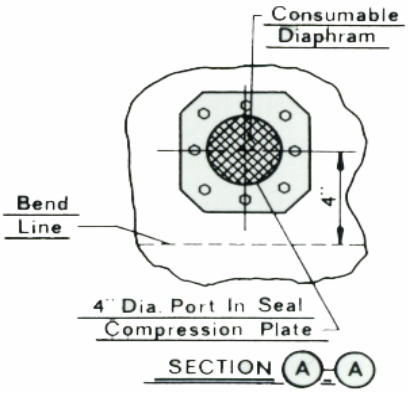

TANK DRAINAGE

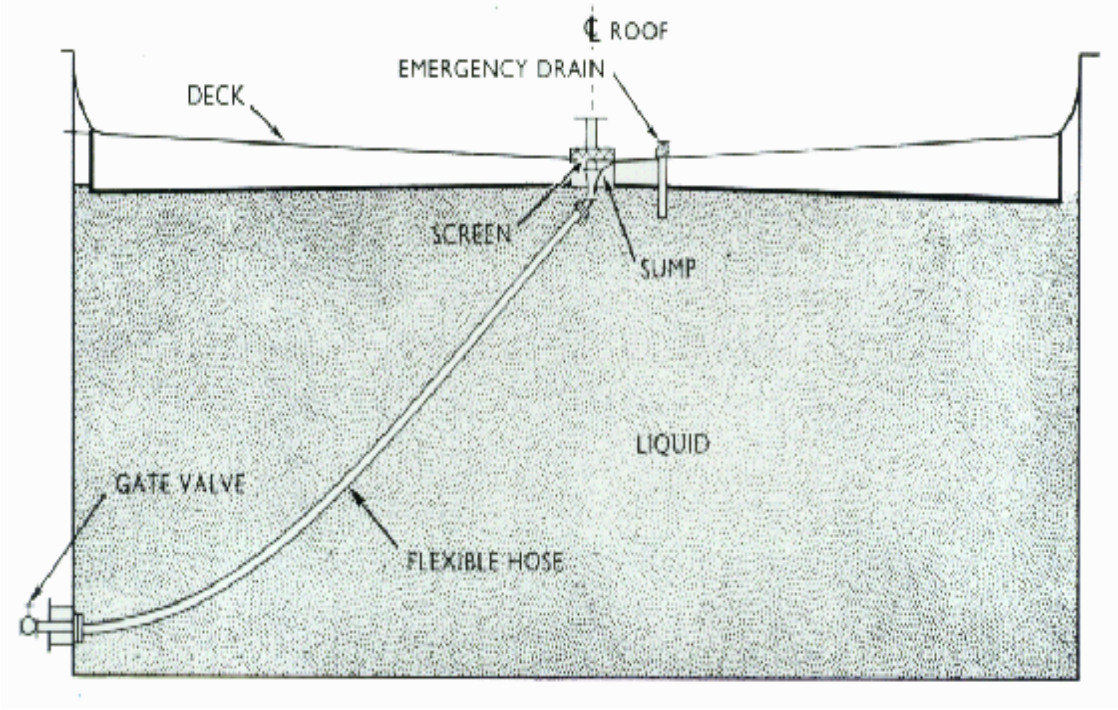

start page

FASEK

homepage : www.fasek.com

email : austria@fasek.com

FASEK –PIPELINE TECHNOLOGY

WEATHERSHIELDS

SIMPLE BASE MOUNTED TYPE

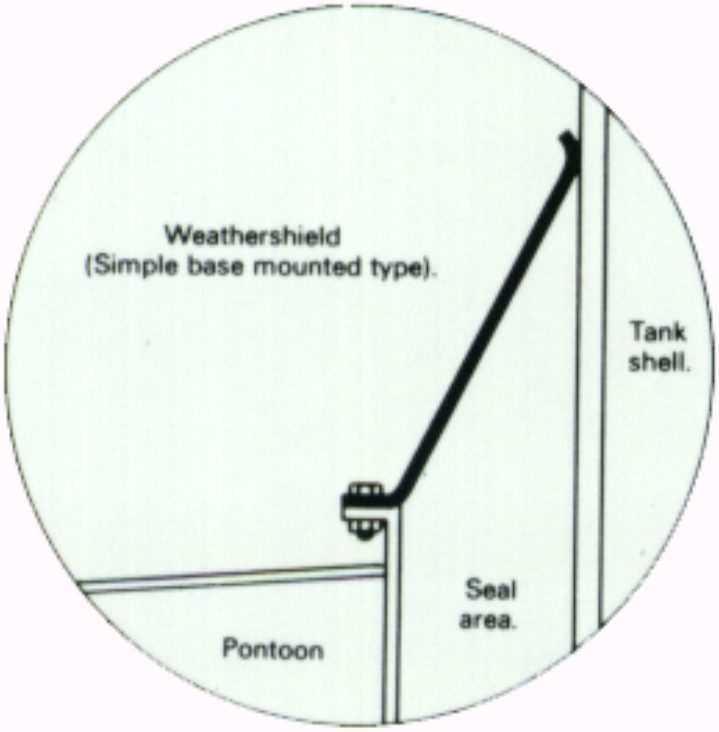

PIVOT MOUNTED TYPE

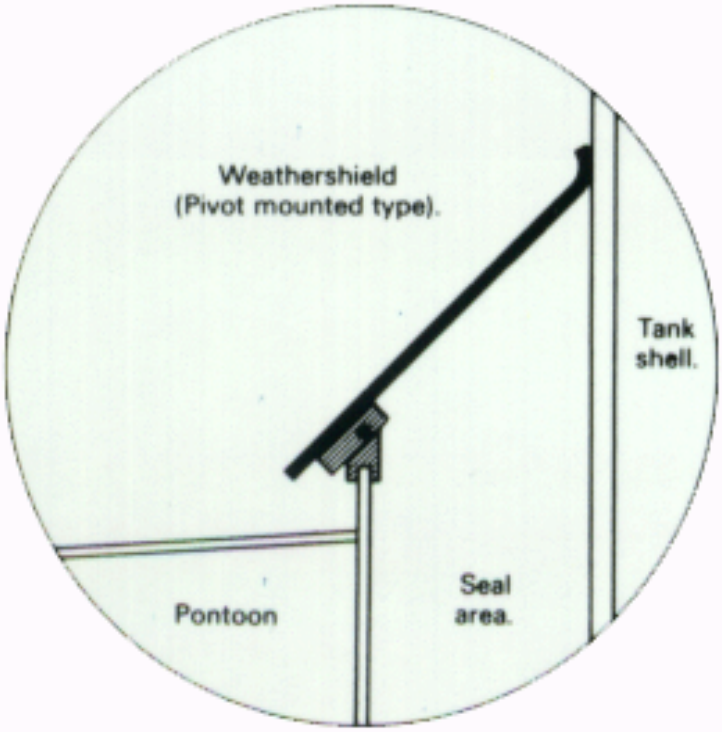

start page

FASEK –PIPELINE TECHNOLOGY

GUIDE POLE/STILLWELL COVER

Further to the issue of Addendum to Publication 2517-Evaporation Loss from External Floating Roof Tanks,which identifies the Guide-pole/Stillwell of a floating roof tank as a major source of tank emissions,Motherwell Nayler Petroseals has developed the "GUIDE POLE COVER".

When fitted,the cover prevents the wind from blowing through the slots in the Guide Pole/Stillwell,eliminating the venturi effect and dramatically reducing the emissions from the tank product to atmosphere.

The Guide Pole Cover has a flexible,collapsible construction and can be adapted to suit most Guide Pole/Stillwell configurations.

Having a wrap-round,robust construction and compatible with products up to 100% aromatics,the cover can be installed very quickly in an in-service tank and has a pay-back time of a few weeks.

The accompanying photographs which show a Guide Pole Cover in the top and bottom dip positions,has been under test in Australia for a major oil company.These tests have proved the cover to be capable of compressing to less than 750mm over the full travel of a typical floating roof.

Fitting the Motherwell Nayler "Guide Pole Cover" not only improves the environment it also will very quickly pay back your initial outlay,thereafter saving money for the rest of the storage life of the tank.

FASEK –PIPELINE TECHNOLOGY

Reference...

1992 - 1994

Renewing of the TRANSGAS compressor stations (Czech Republic)

Products:

Ball Valves, Actuators, Control Systems

start page

FASEK

FASEK –PIPELINE TECHNOLOGY

Reference...

1995 - 1996

EUROPOL Pipeline Part I
(Poland)

***Products*:**

Ball Valves, Actuators,

Control Systems

start page

FASEK

homepage : www.fasek.com

email : austria@fasek.com

FASEK –PIPELINE TECHNOLOGY

Reference...

1996 - 1997

EUROPOL Pipeline
Part II (Poland)

***Products*:**

Ball Valves, Actuators,

Control Systems

start page

FASEK

homepage : www.fasek.com

email : austria@fasek.com

FASEK –PIPELINE TECHNOLOGY

Reference...

1997 - 1998

EUROPOL Pipeline
Part III (Poland)

***Products*:**

Ball Valves, Actuators

Control Systems

start page

FASEK

homepage : www.fasek.com

email : austria@fasek.com

FASEK –PIPELINE TECHNOLOGY

Reference...

1997

Reconstruction of the Serbian Gas Network (Yugoslavia)

Products: Pipelines, Fittings, Ball Valves, Actuators, Control Systems, Regulators

1998

Reconstruction of the Serbian Gas Network (Serbia)

Products: 30 km Pipelines 16“, Fittings, Ball Valves, Actuators, Control Systems, Regulators

2000

Black Sea Platform PETROM

Products: Ball Valves, Flanges, Fittings, Gaskets, Bolts and Nuts,

2000- 2001

Kidircevo (Slovenia/ GEOPLIN)

Products: Ball Valves, Actuators, Control Systems, Pipes, Fittings,.....

start page

FASEK

homepage : www.fasek.com email : austria@fasek.com

FASEK –PIPELINE TECHNOLOGY

Reference...

2001 - 2002 **JANAF (Croatia)**

Products: Receiving / Launching Scraper Trap Barrels (42“)

2002 **NIS GAS - NIS refinery (Yugoslavia)**

Products: Ball Valves, Actuators,

2002 **SPP Slovensky (Slovakia)**

Products: Plug Valves, Gasekts, Fittings, Ball Valves,...

2003 **INA Gas field Palmyra (Syria)**

Products: Wellhads, Xmas trees, 20” x 13 3/8” x 9 5/8” x 7” (liner x 3,1/2”) 10.000 PSI W.P

2003 **Transgaz (Czech)**

Products: Electronic Line Break System

start page

FASEK

FASEK –PIPELINE TECHNOLOGY

Reference...

2003 **OMV Product Pipeline (Austria)**

Products: Pneumatic Line Break System

start page

FASEK

homepage : www.fasek.com

email : austria@fasek.com

FASEK –PIPELINE TECHNOLOGY

QUESTIONNAIRE FOR ACTUATORS

ACTUATORS :

electro hydraulic ☐ pneumatic ☐ electro ☐
gas over oil ☐ gas ☐ others _____

POWER SUPPLY :

electric _____ VAC _____ VDC
pneumatic _____ bar/min. _____ bar/max.
gas _____ bar/min. _____ bar/max.

control voltage _____ V _____ closing time/seconds

REQUIREMENTS :

emergency ☐ fail safe open ☐ fail safe close ☐
solar powered ☐ gas ☐ others _____

TYPE OF VALVE :

ball valve ☐ butterfly ☐ gate valve ☐
plug valve ☐ globe vale ☐ others _____

AMBIENT CONDITIONS :

temperature _____ °C humidity _____ mounting position _____

DIMENSION AND TORQUE FIGURES :

TAG no.	valve size	adapter no.	start torque	running torque	end torque
			NM	NM	NM
			NM	NM	NM
			NM	NM	NM

SPECIAL REQUIREMENTS :

CONTACT PERSON INCLUDING CONTACT DETAILS :

start page

FASEK

homepage : www.fasek.com email : austria@fasek.com

FASEK –PIPELINE TECHNOLOGY

QUESTIONNAIRE FOR BALL VALVES

DIMENSION AND PRESSURE RANGE :

quantity	dimension	pressure

TYPE OF VALVE :

split body ☐ fully welded ☐ top entry ☐

BORE :

full bore ☐ reduced bore ☐ venturi ☐

MOUNTING POSITION :

overground ☐ underground ☐ extension ☐ mm

ACTUATING :

lever ☐ gear box ☐ bare stem ☐

ACTUATORS :

electrohydraulic ☐ pneumatic ☐ electro ☐

gas over oil ☐ gas ☐ others ☐

TYPE OF SEALING :

metal to metal ☐ metal /soft ☐ soft / metal ☐

type of gas : natural gas (natural gas, biogas,.....)

gas quality : sweet dry gas (dry, clean, ...)

SPECIAL REQUIREMENTS :

start page

FASEK

homepage : www.fasek.com email : austria@fasek.com

FASEK –PIPELINE TECHNOLOGY

QUESTIONNAIRE FOR GATE VALVES

CLIENT INFORMATION :

COMPANY :	
CONTACT :	
ADDRESS :	
PROJECT :	
PHONE:	
FAX :	
EMAIL :	

DIMENSION AND PRESSURE RANGE :

quantity	dimension	pressure	medium	temperature

TYPE OF VALVE :

API 6A Slab Gate ☐ API 6A Expanding Gate ☐ Subsea Gate ☐

Gate –flex wedge ☐ Gate –solid disc ☐

MATERIAL :

cast steel ☐ forged steel ☐

ENDS :

flanged ☐ welded ☐ threaded ☐

OPTIONS :

full bore ☐ through conduit ☐ rising stem ☐

non rising stem ☐ block and bleed ☐ fire safe ☐

seat lubrication ☐ body relief valve ☐

start page

FASEK

homepage : www.fasek.com email : austria@fasek.com

FASEK –PIPELINE TECHNOLOGY

PROJECT QUESTION PAGE I
GAS GENERATOR PLANT

1 The Client

Company Name	
Company Address	
Contact Person	
Telephone No.	
Fax No.	
E-Mail address	
Project Reference	
Date	

2 Kind of Power System

2.1	Parallel to the local grid	**Yes** □	**No** □
2.2	Island operation	**Yes** □	**No** □
2.3	Continuously operating	**Yes** □	**No** □
2.4	Emergency operating	**Yes** □	**No** □

FASEK –PIPELINE TECHNOLOGY

PROJECT QUESTION PAGE II
GAS GENERATOR PLANT

Required Electric Energy

3.1	Power Voltage	V	
3.2	Frequency	Hz	
3.3	Electrical Power	kW	
3.4	Generator working hour per year	h	

Required Heat- or Cooling power

4.1	Hot Water	kW	m^3/h		
4.1.1	Temperature of Hot Water	°C			
4.1.2	Pressure of Hot Water	bar			

4.2	Steam	kW	kg/h		
4.2.1	Temperature of Steam	°C			
4.2.2	Pressure of Steam	bar			

4.3	Cooling	kW	
4.3.1	Cooling temperature	°C	

Surrounding conditions

5.1	Altitude	m	
5.2	Surroundings temp. (min/max)	°C	
5.3	Relative humidity (min/max)	% at max. air temp.	
5.4	Max. allowed NOx emission	mg/Nm^3	
5.5	Noise Limitation	dBA at 10 m distance	

FASEK –PIPELINE TECHNOLOGY

PROJECT QUESTION PAGE III
GAS GENERATOR PLANT

Chemical composition of gas

6.1	Methane	CH_4	Vol. %	
6.2	Ethan	C_2H_6	Vol. %	
6.3	Propane	C_3H_8	Vol. %	
6.4	Butane	C_4H_{10}	Vol. %	
6.5	Hydrogen	H2	Vol. %	
6.6	Carbon monoxide	CO_2	Vol. %	
6.7	Nitrogen	N_2	Vol. %	
6.8	Carbon Monoxide	CO	Vol. %	
6.9	Oxygen	O_2	Vol. %	

6.10	Net Calorific Value	Hu	Kcal/Nm^3	

Gas impurity

7.1	Sulphur content	H_2S	mg/Nm^3	
7.2	Chlorine content	CL	mg/Nm^3	
7.3	Fluorine content	F	mg/Nm^3	
7.4	Silicon (Si < 10)	Si	mg/Nm^3 CH4	
7.5	Oil Gas (> C 5)	-	mg/Nm^3 CH4	
7.6	Dust composition	-	µm mg/Nm^3	
7.7	Water content	H_2O		

FASEK –PIPELINE TECHNOLOGY

PROJECT QUESTION PAGE IV
GAS GENERATOR PLANT

Physically composition of gas

8.1	Gas pipeline pressure	bar	
8.2	Gas temperature	Degree C	
8.3	Available gas volume	Nm^3/h	
8.4	Relative humidity of gas	Vol. %	

Gas pipeline connection

9.1	Pipeline diameter	mm	
9.2	Connection to the pipeline	RF or WE	
9.3	Material of pipeline	Steel or PE	
9.4	Distance between pipeline and power container	m	

Special details

10.1	Estate layout available	**Yes** □	**No** □
10.2	Need of material to connect the pipeline with the power container	**Yes** □	**No** □
10.3	Contract of maintenance and spare parts	**Yes** □	**No** □

FASEK –PIPELINE TECHNOLOGY

DIESEL POWER CONTAINER PLANT

PROJECT QUESTION PAGE I

I. The Client

Company Name & Address	
Contact Person	
Telephone No.	
Fax No.	
E-Mail address	
Project Reference	
Date	

II. Kind of Power System

2.1	Parallel to the local grid	Yes ☐	No ☐
2.2	Island operating	Yes ☐	No ☐
2.3	Continuously operating	Yes ☐	No ☐
2.4	Emergency operating	Yes ☐	No ☐

III. Required Electric Energy

3.1	Power Voltage	V	
3.2	Frequency	Hz	
3.3	Electrical Power	kW	
3.4	Generator working hour per year	h	

start page

FASEK

IV. Required Heat- or Cooling power

4.1	Hot Water	kWh			
4.1.1	Temperature of Hot Water	°C			
4.1.2	Pressure of Hot Water	bar			
4.2	Steam	kWh	t/h		
4.2.1	Temperature of Steam	°C			
4.2.2	Pressure of Steam	bar			

4.3	Cooling	kWh	
4.3.1	Cooling temperature	°C	

V. Surrounding conditions

5.1	Altitude	m	
5.2	Surroundings temp. (min/max)	°C	
5.3	Relative humidity (min/max)	% at max. air temp.	
5.4	Max. allowed NOx emission	Mg/Nm³	
5.5	Noise Limitation	dBA at 10 m distance	

VI. Fuel Specifications:

- ☐ DIN/EN 590
- ☐ DIN51601
- ☐ BS 2869(1988)
- ☐ ASTM D975-88 1-D and 2-D
- ☐ NATO Code F54 abd F-75

VII. Any additional Information:

FASEK –PIPELINE TECHNOLOGY

QUESTIONNAIRE CATALOGUE FOR GAS EXPANSION

type of gas : natural gas density of gas : ____ kg/m³

methane content : ____ % CH4

quantity : ____ m³/h

min. quantity : ____ m³/h max. quantity : ____ m³/h

GAS PRESSURE

high pressure : ____ bar low pressure : ____ bar

min. pressure : ____ bar min. pressure : ____ bar

max. pressure : ____ bar max. pressure : ____ bar

GAS TEMPERATURE

before reducing station : ____ °C after reducing station : ____ °C

gas heating

with gas heater : ☐

with cogeneration : ☐

other heating systems : ____

WORKING HOURS

hours per day : ____

hours per week : ____

hours per year : ____

start page

FASEK

homepage : www.fasek.com email : austria@fasek.com

FASEK –PIPELINE TECHNOLOGY

Questionnaire for tank construction and floating roof seals :

Complete and return this page:

Name .....

Company Name .....

Address .....

Telephone Number..... Ext:..... Telex No: .....

Please let me have an Estimate for Coveral.

1. No of tanks: ..... Type of roof construction: .....
2. Tank size inside diameter at bottom tier: .....
   height: .....
3. If column supported: number of columns: .....
   section: .....
4. Stored Product: .....
5. Size roof openings: .....
6. Size shell openings: .....
7. Description of any internal obstructions
   (ie. level indicators, mixers) .....
   .....
8. Slope of tank bottom.....°
   Bottom slopes up to centre..... YES / NO
   Bottom slopes down from centre..... YES / NO
9. Indicate gauging / sampling requirements
10. Fill rate..... litres / second
    Discharge rate..... litres / second
11. Does the tank have internal coating / lining? .....
12. Do you wish ☐ erection by M.B.E.
    ☐ erection supervision by M.B.E. using own labour
    ☐ supply of panels / ☐ seals only.
13. Do you wish us to undertake gas freeing and tank cleanout? ☐ YES / ☐ NO

start page

FASEK

FASEK –PIPELINE TECHNOLOGY

Contact :

FASEK ENGINEERING AND PRODUCTION GMBH

Im Teich. 3
D-27356 Rotenburg
Germany
phone: +49 4261 8408 0
fax: +49 4261 8408 40
email: germany@fasek.com

FASEK ENGINEERING AND PRODUCTION GMBH

Leopold-Gattringer-Str. 119
A-2345 Brunn am Gebirge
Austria
phone: +43 2236 35291
fax : +43 2236 35292
email: austria@fasek.com

Poland :
ARMATECH SP. Z.O.O.
ul.Perkuna 85
04-124 Warszawa/ Poland
phone: +48 22 54 52 811
fax: +48 22 5452888
email: poland@fasek.com

Srbija :
FASEK D.O.O.
Pavla Simica 5
SRB - 21000 Novi Sad
phone: +381 21 453 148
fax: +381 21 453 149
email: office@fasek.co.yu

Croatia, BosniaHerzegovina:
FASEK D.O.O.
Zvonigradska str. 43
HR-10000 Zagreb
phone: +385 1 3695 525
fax: +385 1 3695 546
email: croatia@fasek.com

Romania :
FASEK Romania
STR. INTRAREA BRATES, NR 15
SECTOR 3
31186 BUCHAREST,
Romania
phone: +40723349599
email: denisboerescu@fasek.com

Czech Republic, Slovakia :
FASEK GmbH
Bavorska 856
CZ-15541 Praha
phone: +420 22 4458046
fax: +420 22 4458168
email: czech@fasek.com

Russia and Baltic States :
please contact Armatech

Other States :
please contact our international sales office in Austria